http://www.mercoid.com.my

MERCOID GROUP

SINCE 1980

YOUR ONE SOLUTION
FOR ALL YOUR DEMANDING

VALVES | CONTROLS | INSTRUMENTATIONS

40 YEARS OF TOP QUALITY & INNOVATION

VALVES | PRESSURE GAUGES & THERMOMETER | INSTRUMENTS | STEAM TRAP & ACCESSORIES

MERCOID GROUP

SINCE 1980

PETRONAS | TENAGA NASIONAL

Registered and Approved Vendor

Kementerian Kewangan Malaysia
Ministry of Finance Malaysia

40 YEARS OF TOP QUALITY & INNOVATION

VARIMEX Valves® CO. LTD.

HAN KOOK VALVE MADE IN KOREA

(Registered Patent Holder) (ISO-9001)
Industrial & Process Valves: Gate, Globe, Check, Butterfly, Foot, Safety, Strainer, Bellow Sealed. DN15 - DN600 (PN 16 to PN 250) | Body: GG 25, GGG 40, GSC 25 & Stainless Steel.

NUTORK® Actuators & Valve

Pneumatic Actuator, Electric Actuator, Limit Switchbox, Solenoid valve, EP Positioner, Scoth Yoke Actuator, Manual Overrride, Air Filter

---

MARVIN CONTROLS, INC. | Alco Controls® Specialize Process Valve (GERMANY) | MIPEL | deca | ASAHI | EBRO

Marine/ Bronze/ Ductile/ Malleable Iron Valves Gate, Globe, Check, Ball, Strainer, Sight Glass, Plug & Safety Valves.

HELS
HOSE-EXPANSION JOINT-LEVEL CONTROL-STEAM TRAP

ADCA STEAM EQUIPMENT | ESCO Steam Traps

Hose, Expansion Joint, Level Control Equipments, Steam Trap

Grinnell Flow Control | Uni-D | VALSTEAM ADCA

Pneumatic & Electric Actuated Valves | (E/P Positioner, Namur Solenoid Valves, Limit Switch, FRL & Declutchable Gear Box) ATEX CE 0036 PED

DONG KANG METAL CO., LTD.

DOUGLAS CHERO Spa FORGED VALVES | SW

ISO 9001 & API Std
DK/IS/DOUGLAS | Forged Steel Valves Gate, Globe, Check Ball Valves & Strainer | Class 800# to 4500# | Size 1/4" - 2" | Body: A105, F304, F316, LF2, F11, F51

American Petroleum Institute | ABS TYPE APPROVAL PROGRAM | CE | SW | SICO® | KFEL | HK

API Gate / Globe / Check Valves & Strainers | API Approved Ball Valves (API 6D & 607) | Trunnion & Floating Ball Valves (Fire Safe) | (ANSI 150# to ANSI 2500#)

BDK | WEIR | KDV | Saunders | KFEL | TFM

ISO & API Std Petronas' Approval | PFA Lined-Ball, Plug, Butterfly, Check & Strainer | Lined & Unlined Diaphragm Valves Gate, Globe, Check, Ball Valves & Strainers

---

VALVES CERTIFICATIONS & APPROVALS

CE | TÜV ISO 9001 | API | PCT | Ex | DVE | SA | UL | Germanischer Lloyd 1867 | Attestation de Conformité Sanitaire ACS | DIN DVGW CERT

No. 13 & 15, Jalan Pengacara U1/48, Temasya Industrial Park,
Glenmarie, 40150 Shah Alam, Selangor, Malaysia.
Email: mercoid@mercoid.com.my, valmicro@valmicro.com.my

http://www.mercoid.com.my
Tel: 03-5569 2933 (6 Lines)
Fax: 03-5569 2588, 5569 2788

ASTAM · DOUGLAS ITALIA · PAN CHECK (KOREA) · STOCKHAM · CRANE THE VALVE EXPERTS · H.K

Disco Check/ Inline Check/ Silent Check/ Swing Check Single/ Dual Plate (Wafer/Lugged/Flange) Check Valve (PN16 to PN250) & (ANSI 150# to 2500#)

SIKA · BADOTHERM · Dwyer · WEISS INSTRUMENTS · Baumer · DK · ALCO -GERMANY- · Mercoid · Indfos · Orion INSTRUMENTS

ISO, TUV & Petronas Appr. | Temp. & Press. Gauges/ Switches, Digital & Analog/ Flow & Level Switches | E. Contact, Diaphragm Seal, Capsule Gauges Dial: 25mm to 300mm

WINTECH · FDC FDC Co., Ltd. · PROSAVE · TOPSAFE

Pressure Vacuum Relief Valve / Breather Valve,
Flame Arrester, Emergency Vent Cover, N2 Blanketing System Sampling & Dipping Device, Gauge Hatch, Flame Trap Assembly, Float Check Valve

APATOR POWOGAZ · Darhor · DONG YANG (KOREA) 동양계기교역주식회사 · COVNA FLUID CONTROL SPECIALIST · FC KOREA

Hot / Cold Watermeters Steam, Oil & Gas Flowmeters, Variable Area Flowmeters, Magnectic Level Gauges

DOUGLAS ITALIA Division of Douglas Chero SpA STEAM TRAPS - FLOW INDICATORS - STRAINERS - MANIFOLDS · KURIMOTO (JAPAN) · NV · Sung Won Industrial Valve Co. · AYVAZ · ASTAM · J • K SINCE 1968

General & High Performance Butterfly Valve (Manual, Pneumatic & Electric) | Thermostatic Control Valve, PRV, Sight Glass Steam Blowdown Valves & All Kinds of Steamtraps

KDV · Hattersley · HERSHEY VALVE · valve cimberio

PVC Valves Fittings, Balancing Valve, Diaphragm Valves, Ball Valves, Butterfly Valves

ALCO -GERMANY- · KCL Valve · FLOWINN · DHC CO., LTD · IAPAR Lapar Control Valve · SAMSON · SW

Instrumentation Valves & Manifolds, Block & Bleed Valves, Sanitary Valves & Fittings, Control Valves, Butterfly Valves, High Performance Butterfly Valves

DVS DERVOS VALVE · Sawamura (JAPAN)

API Gate, Globe, Check, Strainer, Ball Valves, Trunnion and Floating | Ball Valves CL150 - CL2500

arflu INDUSTRIAL VALVES (SPAIN)

Plug Valve, Globe Valve, Gate Valve, Checking Valve, Ball Valve

VALVES CERTIFICATIONS & APPROVALS

ISO 9001 · WRAS APPROVED PRODUCT · SINTEF · ABS · Lloyd's Register · BUREAU VERITAS · DNV · Kementerian Kewangan Malaysia Ministry of Finance Malaysia · MAF · PETRONAS · TENAGA NASIONAL

MERCOID GROUP

SINCE 1980

1980

1980
MERCOID CONTROL (M) SDN BHD
(Co. No. 80811-X)

1990

1990
MERCOID PROJECTS (M) SDN BHD
(Co. No. 233282-T)

2000

2006
VARIMEX VALVES (M) SDN BHD
(Co. No. 747806-A)

2007
VALMICRO CONTROLS (M) SDN BHD
(Co. No. 775028-T)

2010

2012
VARIMEX PROCESS (M) SDN BHD
(Co. No. 981451-T)

2016
MERCOID ENERGY (M) SDN BHD
(Co. No. 1211088-D)

2019
VALVES MALAYSIA (M) SDN BHD
(Co. No. 1317771-P)

Current Year

Introduction

Mercoid Group of Companies was established since 1980 as a partnership and was subsequently converted into a private limited company on 5th February 1982. Since then, the group have expanded adding several more subsidiaries i.e. Mercoid Control (M) Sdn. Bhd., Mercoid Projects (M) Sdn. Bhd., Valmicro Controls (M) Sdn. Bhd., Varimex Valves (M) Sdn. Bhd., Varimex Process (M) Sdn. Bhd., Mercoid Energy (M) Sdn. Bhd. and Valves Malaysia (M) Sdn. Bhd.

The principle Activities of the company are Importer, Exporter, Wholesaler, Sole-Distributor, Agent & stockist of all types of Oil & Gas to Industrial Valves, Temperature & Pressure meters, gauges, renowned manufacturers who are leaders in the industry.

With most companies adopting Just-In-Time (JIT) for their requirement to save on stock holding cost, we have since in June 2001 moved to a bigger building of our own that enables us to carry stocks of over RM10,000,000.00 at any one time. Coupled together with our arrangements with several establish Transporter (Locally & Internationally) to cater for all our customers globally.

We feel confident our solutions can assist in all your project needs. Our industry-leading combination of competitive prices, technical mastery, range of products supplies, and on-time, as-promised deliveries, has earned us an outstanding reputation for customer satisfaction, a reputation that is only matched by the top-notch quality customer service and efficient procurement expertise of our trained staff. Meet our team to see for yourself why Mercoid Group is a leader in amazing quality and respectful service.

Vision

We provide the needs in the Valves, Gauges and Instruments industry, by supplying valves, gauges and instruments of all types from various world renowned manufacturers. We offer standard products and custom made products, all in good quality, to deliver only reliable products to our customers and have a large stock of inventories. Mercoid Group of Companies exceeds client expectations and provides total care for our valuable customers. We work with dedication and excellence to meet the demands from General Industries, Oleo & Petro Chemical, Offshore and Oil and Gas Industries.

Mission

Mercoid Group of Companies wants to be the company in the Valves, Gauges and Instruments industry where people know exactly who we are, what we do and most importantly what we can do. We move along with the world, the industries, and the people. A high priority for us is that we will book continuous successes driven by our values and keep the focus on technical innovations and (brand) development while we remain committed and dedicated to our customers, value good quality and ensure we continuously achieve for excellence.

Values

We stand by our values of ***MERCOID*** where:-

***M* - Motivated**
Our company is constantly motivated to provide the best possible services to serve our clients and partners.

***E* - Energetic**
Our sales and support teams are always energetic providing our customers valuable ideas and solutions to cater to their need at all times.

***R* - Reliability**
The reliability of our products are acquired by suppliers with the highest quality standards. Before delivery to the customer, all products pass through internal quality checks. We can thus guarantee the highest standards.

***C* - Customers**
The satisfaction and needs of our customers come first. Our customers' wishes are processed quickly and reliably. All Mercoid employees at all our sites and our independent sales partners ensure that this is the case.

***O* - Organization**
Our organization structures lies well integrated in the Team Work of all levels from employer to employees which make us constantly trusting forward further above self.

***I* - Innovations**
With the changes of Industries needs and requirements, we constantly make the sure that technical innovations of our products are always up to date according to International Standards and Quality.

***D* - Dedication**
We are committed and dedicated to our customers, value good quality and ensuring we continuously achieve for excellence.

40 YEARS OF TOP QUALITY & INNOVATION

Directors

Key Message

When Mercoid Group opened in Malaysia 40 years ago, we knew we were on to something big. We knew the potential here would be huge — and we were right. Congratulations to Mercoid Group on for more than four decades of success!

As we look to the future, our strong partnership will be key as we continue to work together to provide compelling products, solutions and experiences for customers and distributors well into the future.

There's no better time for the Mercoid Group business, and we're so glad you're part of it! Thank you for your commitment to the business and congratulations again on all you've achieved.

Here's to the next 40 years of Mercoid Group!

Dato Jeffrey Woo
Group Managing Director

MERCOID GROUP ORGANISATION CHART

Content


SIKA
Made in Germany
°C
KL1

GLOBE VALVE

S-PATTERN BELLOW SEALED | S-PATTERN GLOBE VALVE | PRESSURE SEALED GLOBE VALVE | ANGLE GLOBE CHECK VALVE | GLOBE CHECK VALVE

A Globe valve is a linear motion valve and are primarily designed to stop, start and regulate flow. The disk of a globe valve can be totally removed from the flowpath or it can completely close the flowpath.

Conventional globe valve may be used for isolation and throttling services. Globe valve are extensively employed to control flow. The range of flow control, pressure drop, and duty must be considered in the design of the valve to avert premature failure and to assure satisfactory service. Valves subjected to high-differential pressure-throttling service require specially designed valve trim.

GLOBE VALVE S-PATTERN - DIN STD

CAST IRON / CARBON STEEL / STAINLESS STEEL

MERCOID
Tel: 03-5569 2933 (6 Lines) Fax: 03-5569 2588, 5569 2788
Email: mercoid@mercoid.com.my, valmicro@valmicro.com.my
http://www.mercoid.com.my

VARIMEX Valves® CO. LTD.

FIG 215 / 218

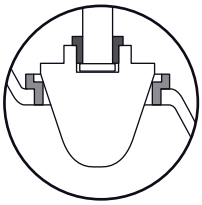

Option : Regulating Disc

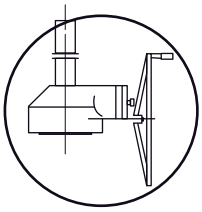

Option : Gear Box

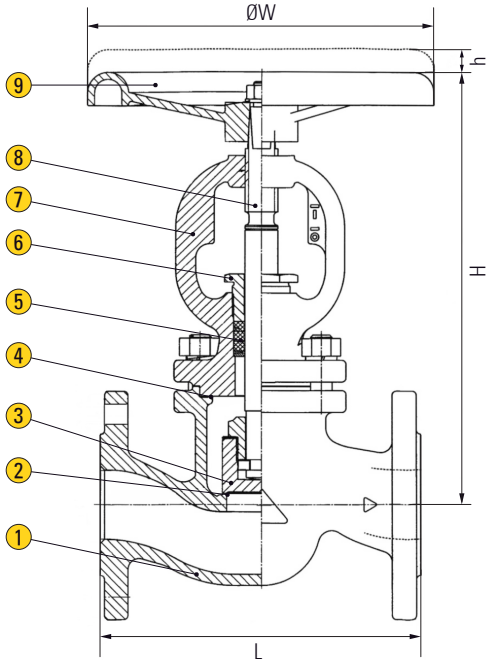

APPLICATION

Suitable for water, steam, oil, gases and non-abrasive media
(Refer to corrosion resistance table for valve materials selection).

SPECIFICATION

Face To Face Dimension	According to EN 558-1 Series 1
End Connection	Flanged End to DIN PN16 and PN40

MATERIAL

	Parts	FIG 215 - CI	FIG 218 - CS	FIG 215 / 218 - SS304 / 316
1	Body	Cast Iron EN-GJL-250	Cast Steel GP240GH	Stainless Steel 1.4301 / 1.4408
2	Seat Ring	Stainless Steel X20Cr13	Stainless Steel X20Cr13	Stainless Steel F304 / F316
3	Disc	Stainless Steel X20Cr13	Stainless Steel X20Cr13	Stainless Steel F304 / F316
4	Bonnet Gasket	Graphite - CrNiSt	Graphite - CrNiSt	SS 304 / 316 + Graphite
5	Packing	Graphite	Graphite	Graphite
6	Gland	Cast Iron EN-GJL-250	Forged Steel C 22.8	Stainless Steel F304 / F316
7	Bonnet	Cast Iron EN-GJL-250	Cast Steel GP240GH	Stainless Steel 1.4301 / 1.4408
8	Stem	Stainless Steel X20Cr13	Stainless Steel X20Cr13	Stainless Steel F304 / F316
9	Handwheel	Cast Iron EN-GJL-250	Cast Steel GP240GH	Cast Steel GP240GH

PREASSURE-TEMPERATURE RATINGS ACC. DIN EN 1092-1/2

Material	Temperature										
	-10°C	20°C	100°C	120°C	150°C	200°C	250°C	300°C	350°C	400°C	450°C
PN16 - Cast Iron	16 Bar	16 Bar	16 Bar	16 Bar	14 Bar	13 Bar	11 Bar	10 Bar	-	-	-
PN40 - Cast Steel	40 Bar	40 Bar	40 Bar	40 Bar	37 Bar	35 Bar	32 Bar	28 Bar	24 Bar	21 Bar	18 Bar

DIMENSIONS

Unit : mm

Size (mm)	15	20	25	32	40	50	65	80	100	125	150	200	250	300
L	130	150	160	180	200	230	290	310	350	400	480	600	730	850
H - PN16	167	167	175	186	235	248	260	291	338	384	429	529	638	710
H - PN40	190	190	205	260	270	275	320	370	405	436	496	576	665	770
ØW - PN16	100	100	120	120	160	160	180	200	250	250	320	360	360	500
ØW - PN40	120	120	120	160	160	160	250	250	320	320	320	400	500	520
Weight (Kg) - PN16	3.3	3.9	5	6.6	8.4	12	17.3	22.7	35.8	52.8	74.2	126	200	315
Weight (Kg) - PN40	4.6	5.3	6	11	12.3	16	28	36	50	63	86	175	326	414

*Specification given are subject to changed without further notice.

MERCOID
Tel: 03-5569 2933 (6 Lines) Fax: 03-5569 2588, 5569 2788
Email: mercoid@mercoid.com.my, valmicro@valmicro.com.my
http://www.mercoid.com.my

GLOBE VALVE
BELLOW SEAL TYPE - DIN STD
CAST IRON / DUCTILE IRON / CARBON STEEL / STAINLESS STEEL

VARIMEX Valves® CO. LTD.

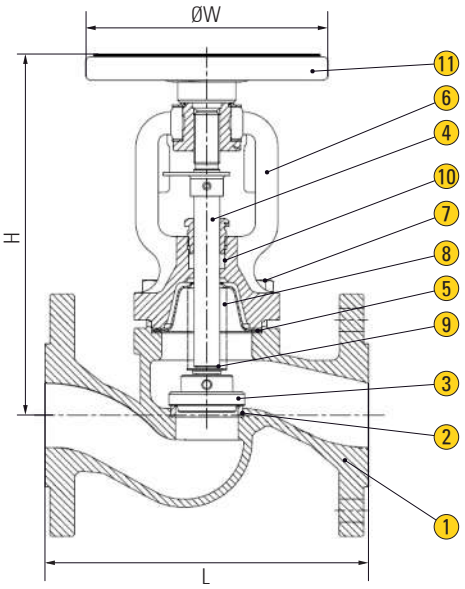

Option
High Performance Long Bonnet
Bellow Seald Globe Valve

FIG 215M / 218M

APPLICATION
Suitable for water, steam, oil, gases and non-abrasive media
(Refer to corrosion resistance table for valve materials selection).

SPECIFICATION

Face To Face Dimension	According to EN 558-1 Series 1
Preasure Rating	PN16 / 40, CLASS 150 / 300
End Connection	Flanged End to DIN PN16 / 40, ANSI 150 / 300
Bellow Design	15mm 150mm (Standard) 200mm - 400mm (With Bellow Protector)

MATERIAL

	Parts	FIG 215M / FIG 218M - CI	FIG 215M / FIG 218M - DI	FIG 215M / FIG 218M	FIG 215M / 218M - SS304 / 316
1	Body	Cast Iron EN-GJL-250	Ductile Iron EN-GJS-400-18-LT	Carbon Steel GP240GH+N	Stainless Steel 1.4301 / 1.4408
2	Seat Ring	Stainless Steel X20Cr13	Stainless Steel X20Cr13	Stainless Steel X20Cr13	Stainless Steel F304 / F316
3	Disc	Stainless Steel X20Cr13	Stainless Steel X20Cr13	Stainless Steel X20Cr13	Stainless Steel F304 / F316
4	Stem	Stainless Steel X20Cr13	Stainless Steel X20Cr13	Stainless Steel X20Cr13	Stainless Steel F304 / F316
5	Bonnet Gasket	SS304 + Graphite	SS304 + Graphite	SS304 + Graphite	SS 304 / 316 + Graphite
6	Bonnet	Carbon Steel GP240GH+N	Carbon Steel GP240GH+N	Carbon Steel GP240GH+N	Stainless Steel 1.4301 / 1.4408
7	Bonnet Nut	A194 2H	A194 2H	A194 2H	A193 B8M
8	Bonnet Stud	A193 B7	A193 B7	A193 B7	A193 8M
9	Bellow	Stainless Steel 304	Stainless Steel 304	Stainless Steel 304	Stainless Steel 304 / 316
10	Packing	Graphite	Graphite	Graphite	Graphite
11	Handwheel	St. Coated / Forged Steel C22.8	St. Coated / Forged Steel C22.8	St. Coated / Forged Steel C22.8	St. Coated / Forged Steel C22.8

*Y-Pattern design and Butt Welded Ends are available on request

PREASSURE-TEMPERATURE RATINGS ACC. DIN EN 1092-1/2

Material	Temperature									
	-10˚C	20˚C	100˚C	150˚C	200˚C	250˚C	300˚C	350˚C	400˚C	450˚C
Cast Iron	16 Bar	16 Bar	16 Bar	14 Bar	13 Bar	11 Bar	10 Bar	-	-	-
Ductile Iron	16 Bar	16 Bar	16 Bar	16 Bar	15 Bar	14 Bar	13 Bar	11 Bar	-	-
Carbon Steel	30 Bar	40 Bar	37 Bar	35 Bar	30 Bar	28 Bar	26 Bar	24 Bar	23 Bar	22 Bar
Stainless Steel	30 Bar	36 Bar	31 Bar	28 Bar	26 Bar	24 Bar	22 Bar	21 Bar	20 Bar	19 Bar

DIMENSIONS

Unit : mm

Size (mm)	15	20	25	32	40	50	65	80	100	125	150	200	250	300
L	130	150	160	180	200	230	290	310	350	400	480	600	730	850
H	180	190	220	220	255	260	295	330	350	420	455	550	730	800
ØW	120	140	140	140	160	160	180	200	250	250	350	500	500	500
Weight (Kg)	4.2	4.7	5.6	7.5	9.5	12	17.4	23.3	35.8	56.2	78.8	154	238	339

*Specification given are subject to changed without further notice.

GLOBE VALVE API 6D

CARBON STEEL / STAINLESS STEEL

MERCOID
Tel: 03-5569 2933 (6 Lines) Fax: 03-5569 2588, 5569 2788
Email: mercoid@mercoid.com.my, valmicro@valmicro.com.my
http://www.mercoid.com.my

HAN KOOK VALVE
MADE IN KOREA

FIG GB-6D

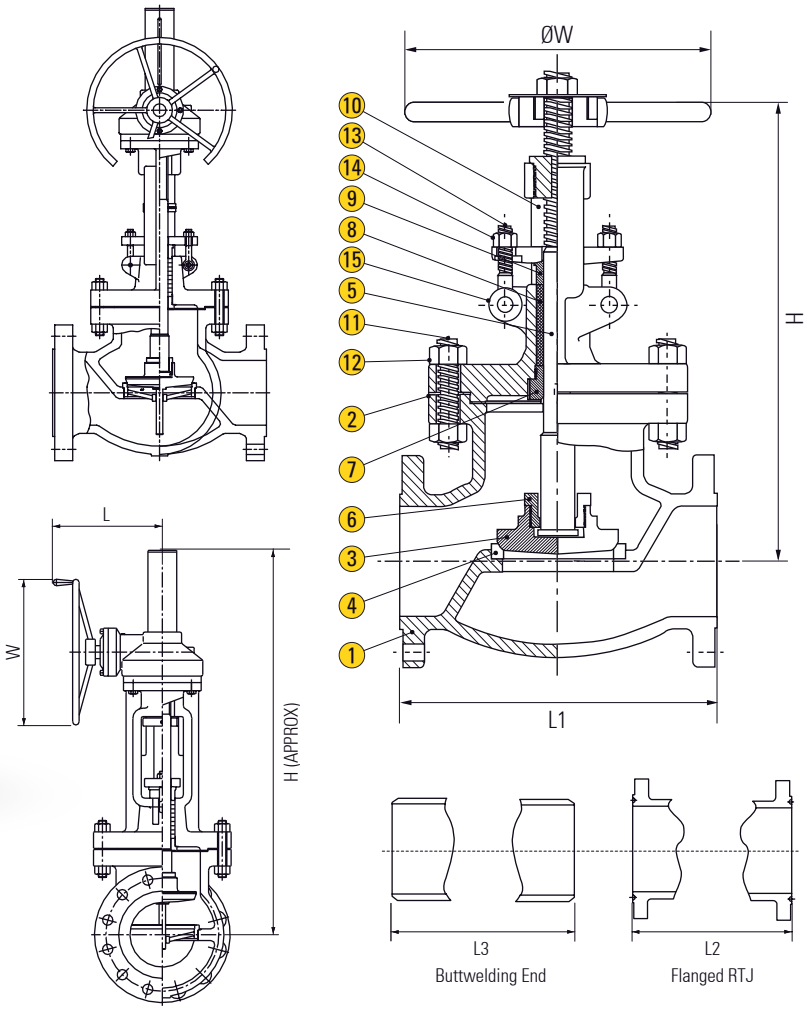

SPECIFICATION

Designed and Manufactured	API 6D
Face To Face Dimension	ASME 16.10
Pressure Rating	Class 150, 300, 600, 900, 1500 and 2500
Flange End Dimension	ASME B16.5
BW End Dimension	ASME B16.25
Test and Inspection	API 598
Pressure - Temperature Rating	ASME B16.34

MATERIAL

Parts		ASTM Specification						
		Standard	High Temperature Service				Low Temperature Service	Corrosion Service
1	Body	A216-WCB	A217-WC1	A217-WC6	A217-WC9	A217-C5	A352-LCB	A351-CF8M
2	Bonnet	A216-WCB	A217-WC1	A217-WC6	A217-WC9	A217-C5	A352-LCB	A351-CF8M
3	Disc	A217-CA15	A217-WC1	A217-WC6	A217-WC9	A217-C5	A352-LCB	A351-CF8M
4	Body Seat Ring	A105+HARD FACE	A105+HARD FACE	A105+HARD FACE	A105+HARD FACE	A105+HARD FACE	A182-F304	A182-F316
5	Stem	A276-410	A276-410	A276-410	A276-410	A276-410	A276-304	A276-316
6	Disc Gland	A276-410	A276-410	A276-410	A276-410	A276-410	A276-304	A276-316
7	Bonnet Bush	A276-410	A276-410	A276-410	A276-410	A276-410	A276-F304	A276-F316
8	Packing Gland	A276-410	A276-410	A276-410	A276-410	A276-410	A276-304	A276-316
9	Gland Flange	A105	A105	A105	A105	A105	A105	A351-CF8/A240-304
10	Yoke Bush	A439-D2	A439-D2	A439-D2	A439-D2	A439-D2	A439-D2	A439-D2
11	Bonnet Bolt	A193-B7	A193-B7	A193-B7	A193-B16	A193-B16	A320-L7	A193-B8
12	Bonnet Nut	A194-2H	A194-2H	A194-2H	A194-4	A194-4	A194-4	A194-8
13	Gland Bolt	A307.B	A307.B	A307.B	A307.B	A307.B	A307.B	A193-B8
14	Gland Nut	A307.B	A307.B	A307.B	A307.B	A307.B	A307.B	A194-8
15	Hinge Pin	A276-410	A276-410	A276-410	A276-410	A276-410	A276-304	A276-304

*Note : In case of 12" and larger size, We' ll use trim material overlayed one on the same or equivalent material of the body.

*Specification given are subject to changed without further notice.

CLASS 150 *(N/A for L2)

Valve Size	inch	2	2½	3	4	5	6	8	10	12	14	16	18	20	24
	mm	50	65	80	100	125	150	200	250	300	350	400	450	500	600
L1 & L3	inch	8.0	8.5	9.5	11.5	14.0	16.0	19.5	24.5	27.5	31.0	36.0	38.5	38.5	51.0
	mm	203	216	241	292	356	406	495	622	699	787	914	978	978	1295
H	inch	10.8	11.4	12.5	13.7	15.6	17.3	22.0	26.4	29.1	54.7	62.6	71.7	80.7	90.6
	mm	275	290	320	350	400	440	560	670	740	1390	1590	1820	2050	2300
W	inch	7.7	7.7	8.5	9.4	11.0	11.8	14.0	15.7	17.7	22.0	22.0	24.0	27.6	27.6
	mm	195	195	215	240	280	300	355	400	450	560	560	610	700	700
L	inch	-	-	-	-	-	-	-	-	-	16.3	16.3	17.0	17.0	17.0
	mm	-	-	-	-	-	-	-	-	-	414	414	432	432	432
Weight	LB	46.3	59	72.8	116.9	163.2	209.5	410.1	524.8	804.8	1364.9	1808.1	2154.3	2712.2	3472.9
	Kg	21	27	33	53	74	95	186	238	365	619	820	977	1230	1575

CLASS 300

Valve Size	inch	2	2½	3	4	5	6	8	10	12	14	16	18	20	24	32
	mm	50	65	80	100	125	150	200	250	300	350	400	450	500	600	800
L1 & L3	inch	10.5	11.5	12.5	14.0	15.75	17.5	22.0	24.5	28.0	33.0	34	38.5	40	53	62.75
	mm	267	292	318	356	400	445	559	622	711	838	864	978	1016	1346	1594
L2	inch	11.12	12.12	13.12	14.62	16.38	18.12	22.62	25.12	28.62	33.6	34.6	39.12	40.75	53.88	63.4
	mm	283	308	333	371	416	460	575	638	727	854	879	994	1035	1369	1610
H	inch	14.4	15.7	16.1	18.9	26.6	27.6	29.5	31.5	37.6	54.7	62.6	71.7	80.7	90.6	122.0
	mm	365	400	410	480	676	700	750	800	955	1390	1590	1820	2050	2300	3100
W	inch	7.7	8.5	9.4	10.6	12.4	14.0	15.7	17.7	19.7	22.1	27.6	27.6	27.6	31.5	31.5
	mm	195	215	240	270	315	355	400	450	500	560	700	700	700	800	800
L	inch	-	-	-	-	-	-	-	-	-	16.3	18.4	18.4	18.4	20.7	20.7
	mm	-	-	-	-	-	-	-	-	-	414	468	468	468	526	526
Weight	LB	61.7	86.0	99.2	189.6	253.6	330.8	621.8	809.2	1045.2	1907.3	2529.1	3014.2	3572.1	5159.7	7364.7
	Kg	28	39	45	86	115	150	280	367	474	865	1147	1367	1620	2340	3340

CLASS 600

Valve Size	inch	2	2½	3	4	5	6	8	10	12	14	16
	mm	50	65	80	100	125	150	200	250	300	350	400
L1 & L3	inch	11.5	13.0	14.0	17.0	20.0	22.0	26.0	31.0	33.0	35.0	39.0
	mm	292	330	356	432	508	559	660	787	838	889	991
L2	inch	11.62	13.12	14.12	17.12	20.12	22.12	26.12	31.12	33.12	35.12	39.12
	mm	295	333	359	435	511	562	664	791	841	892	994
H	inch	16.0	19.8	19.9	22.4	31.8	37.8	51.8	59.5	96.9	70.9	76.0
	mm	407	502	505	568	807	959	1315	1511	1775	1800	1930
W	inch	7.7	8.5	10.6	11.8	14.0	15.7	28.0	31.5	35.4	35.4	35.4
	mm	195	215	270	300	355	400	710	800	900	900	900
L	inch	-	-	-	-	-	-	18.4	20.7	26.4	26.4	26.4
	mm	-	-	-	-	-	-	468	526	670	670	670
Weight	LB	114.5	141.1	187.4	330.8	551.3	714.4	1234.8	1741.9	2264.5	2932.7	3825.7
	Kg	52	65	85	150	250	324	560	790	1027	1330	1735

CLASS 900

Valve Size	inch	2	2½	3	4	5	6	8	10	12	14
	mm	50	65	80	100	125	150	200	250	300	350
L1 & L3	inch	14.5	16.5	15.0	18.0	22.0	24.0	29.0	33.0	38.0	40.5
	mm	368	419	381	457	508	610	737	838	965	1029
L2	inch	14.62	16.62	15.12	18.12	22.13	24.12	29.12	33.12	38.12	40.88
	mm	371	422	384	460	562	613	740	841	968	1038
H	inch	27.4	27.4	30.5	33.7	53.1	58.6	65.69	63.0	67.1	87.0
	mm	695	695	775	855	1350	1488	1665	1600	1705	2210
W	inch	15.7	15.7	15.7	15.7	19.7	22.0	31.5	31.5	35.4	35.4
	mm	400	400	400	400	500	560	800	800	900	900
L	inch	-	-	-	-	-	16.3	20.7	20.7	26.4	26.4
	mm	-	-	-	-	-	414	526	526	670	670
Weight	LB	271.2	341.8	154	441	815.9	1101.5	2756.3	4520.3	5843.3	8048.3
	Kg	123		161	200	370	500	1250	2050	2650	3650

CLASS 1500

Valve Size	inch	2	2½	3	4	5	6	8	10	12	14
	mm	50	65	80	100	125	150	200	250	300	350
L1 & L3	inch	14.5	16.5	18.5	21.5	26.5	27.75	32.75	39.0	44.5	49.5
	mm	368	419	470	546	673	705	832	991	1130	1257
L2	inch	14.62	16.62	18.62	21.62	26.61	28.0	33.13	39.38	45.12	50.25
	mm	371	422	473	549	676	711	842	1000	1146	1276
H	inch	27.4	27.4	31.5	40.0	57.1	64.8	77.2	91.0	105.1	126.0
	mm	695	695	799	1015	1450	1645	1960	2310	2670	3200
W	inch	15.7	15.7	19.7	19.7	24.8	28.0	28.0	30.0	30.0	30.0
	mm	400	400	500	500	630	710	710	760	760	760
L	inch	-	-	-	-	-	18.4	18.4	20.2	20.2	22.3
	mm	-	-	-	-	-	468	468	512	512	567
Weight	LB	271.2	341.8	396.9	749.7	1124.6	1482	4630.5	7055.0	9702.0	11907.0
	Kg	123	155	180	340	510	627	2100	3200	4400	5400

CLASS 2500

Valve Size	inch	2	2½	3	4	6	8
	mm	50	65	80	100	150	200
L1 & L3	inch	17.75	20.0	22.75	26.5	36.0	40.25
	mm	451	508	578	673	914	1022
L2	inch	17.87	20.25	23.0	26.88	36.5	40.87
	mm	454	514	584	683	927	1038
H	inch	28.35	31.50	34.84	49.61	75.0	97.05
	mm	720	800	885	1260	1905	2465
W	inch	16.0	20.0	22.0	24.0	24.0	24.0
	mm	400	500	560	600	610	610
L	inch	-	-	-	-	-	-
	mm	-	-	-	-	-	-
Weight	LB	388.0	582.0	679.0	1673.3	4387.2	9678.3
	Kg	176	264	308	759	1990	4390

*Specification given are subject to changed without further notice.

GLOBE VALVE & GLOBE CHECK VALVE

ANGLE PATTERN

CAST IRON / CARBON STEEL

VARIMEX Valves® CO. LTD.

MERCOID
Tel: 03-5569 2933 (6 Lines) Fax: 03-5569 2588, 5569 2788
Email: mercoid@mercoid.com.my, valmicro@valmicro.com.my
http://www.mercoid.com.my

FIG 216 / 331
FIG 222 / 333

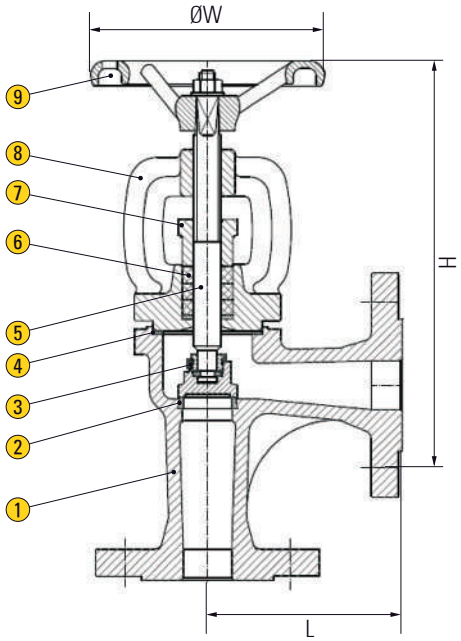

APPLICATION

Suitable for water, steam, oil, gases and non-abrasive media
(Refer to corrosion resistance table for valve materials selection).

SPECIFICATION

Face To Face Dimension	According to EN 558-1 Series 8
End Connection	Flanged End to DIN PN16 and PN40

MATERIAL

	Parts	FIG 216 / 331	FIG 222 / 333
1	Body	Cast Iron EN-GJL-250	Cast Steel GP240GH
2	Seat Ring	Stainless Steel X20Cr13	Stainless Steel X20Cr13
3	Disc	Stainless Steel X20Cr13	Stainless Steel X20Cr13
4	Bonnet Gasket	Graphite - CrNiSt	Graphite - CrNiSt
5	Stem	Stainless Steel X20Cr13	Stainless Steel X20Cr13
6	Packing	Graphite	Graphite
7	Gland	Cast Iron EN-GJL-250	Forged Steel C 22.8
8	Bonnet	Cast Iron EN-GJL-250	Cast Steel GP240GH
9	Handwheel	Cast Iron EN-GJL-250	Cast Steel GP240GH

PREASSURE-TEMPERATURE RATINGS ACC. DIN EN 1092-1/2

Material	Temperature										
	-10°C	20°C	100°C	120°C	150°C	200°C	250°C	300°C	350°C	400°C	450°C
PN16 - Cast Iron	16 Bar	16 Bar	16 Bar	16 Bar	14 Bar	13 Bar	11 Bar	10 Bar	-	-	-
PN40 - Cast Steel	40 Bar	40 Bar	40 Bar	40 Bar	37 Bar	35 Bar	32 Bar	28 Bar	24 Bar	21 Bar	18 Bar

DIMENSIONS

Unit : mm

Size (mm)	15	20	25	32	40	50	65	80	100	125	150	200	250	300
L	90	95	100	105	115	125	145	155	175	200	225	280	325	375
H - PN16	168	168	181	182	226	228	252	270	326	371	421	505	593	810
H - PN40	175	175	178	249	262	278	306	340	375	422	478	565	637	855
ØW - PN16	100	100	120	120	160	160	180	200	250	250	320	360	360	500
ØW - PN40	120	120	120	160	160	160	250	250	320	320	320	400	500	520
Weight (Kg) - PN16	3.1	3.5	4.8	6.6	8.7	11.8	14	20.5	32.2	46	62	106	184	270
Weight (Kg) - PN40	4.1	4.7	4.9	10.6	13.6	16	28	37	48	59.2	75.5	153	188	327

*Specification given are subject to changed without further notice.

MERCOID
Tel: 03-5569 2933 (6 Lines) Fax: 03-5569 2588, 5569 2788
Email: mercoid@mercoid.com.my, valmicro@valmicro.com.my
http://www.mercoid.com.my

GLOBE VALVE
BELLOW SEAL Y-TYPE - DIN STD
CARBON STEEL / STAINLESS STEEL

VARIMEX Valves® CO. LTD.

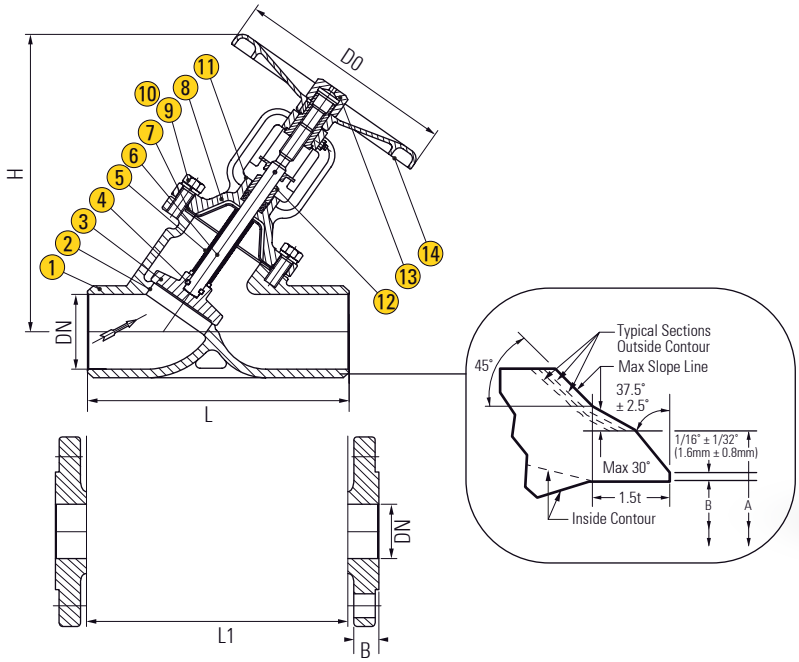

FIG 218Y

APPLICATION
Suitable for water, steam, oil, gases and non-abrasive media (Refer to corrosion resistance table for valve materials selection).

SPECIFICATION

Face To Face Dimension	According to EN 558-1 Series 1
Preasure Rating	PN16 / 40, CLASS 150 / 300
End Connection	Flanged End to DIN PN16 / 40, ANSI 150 / 300
Bellow Design	15mm 150mm (Standard) 200mm - 400mm (With Bellow Protector)

MATERIAL

	Parts	FIG 218Y - CS	FIG 218Y - SS	FIG 218 - LT
1	Body	1.0619	1.4408	1.1138
2	Body Seat	1.4370	Stellite 21	1.4370t
3	Disc Surface	1.4021	Stellite 6	Stellite 6
4	Disc	1.4021	1.4571	1.4571
5	Bellows	1.4571	1.4571	1.4571
6	Stem	1.4021	1.4571	1.4571
7	Gasket	1.4571 / Graphite	1.4571 / Graphite	1.4571 / Graphite
8	Bonnet	1.0619	1.4408	1.1138
9	Bolts	A2/70	A2/70	A2/70
10	Nuts	A2/70	A2/70	A2/70
11	Gland	1.0715	1.4305	1.4305
12	Gland Packing	Pure Graphite	Pure Graphite	Pure Graphite
13	Cap Nut	1.0718	1.4305	1.4305
14	Handwheel	0.6020	0.6020	0.6020

DIMENSIONS

Unit : mm

Size (DN)	PN16 & PN40					
	L / L1	H	D0	B	A	t
15	130	191	130	15.80	21.34	2.77
20	150	191	130	20.93	26.67	2.87
25	160	197	130	26.64	33.40	3.38
32	180	200	130	35.05	42.16	3.56
40	200	218	150	38.10	48.26	3.68
50	230	220	150	52.50	60.33	3.91
65	290	238	180	62.71	73.03	5.16
80	310	257	180	77.93	88.90	5.49
100	350	340	200	102.26	114.30	6.02
125	400	360	200	128.19	141.30	6.55
150	480	390	400	154.05	168.28	6.87
200	600	530	400	202.72	219.08	8.18
250	730	665	440	254.51	273.05	9.27
300	850	720	440	304.80	323.85	9.53

*Specification given are subject to changed without further notice.

GLOBE VALVE FLANGE

FORGED CARBON STEEL / STAINLESS STEEL

MERCOID
Tel: 03-5569 2933 (6 Lines) Fax: 03-5569 2588, 5569 2788
Email: mercoid@mercoid.com.my, valmicro@valmicro.com.my
http://www.mercoid.com.my

DONG KANG

Y-Pattern Globe

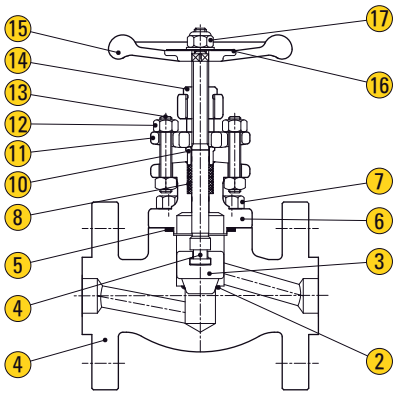

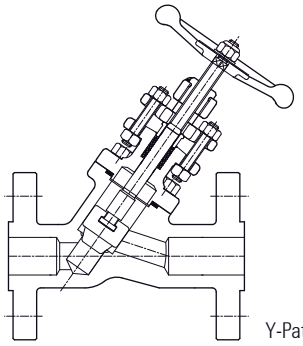

Y-Pattern Globe

FIG GD-*1-*2-*3

Note : *1 Class | *2 Material | *3 Connection

APPLICATION

Suitable for water, steam, oil, gases and non-abrasive media
(Refer to corrosion resistance table for valve materials selection).

SPECIFICATION

Face To Face Dimension	ASME B16.10
Preasure Rating	Class 150, 300, 600, 900,1500 and 2500
End To End Dimension	ASME B16.10
Flange End Dimension	ASME B16.5
BW End Dimension	ASME B16.25

CLASS 150 - 300 - 600 - 900

Unit : mm (inch)

Port	Valve Size	Handwheel Diameter	Center to Top (Open)	Dia. of Port Openings	End to End			Approx. Wt, Kg (Lb)		
					Class 150	Class 300	Class 600	Class 150	Class 300	Class 600
Reduced	1/2	86 (3.39)	146 (5.75)	9.5 (0.37)	108 (4.25)	152 (6.0)	165 (6.5)	2.5 (5.5)	3.0 (6.6)	3.3 (7.3)
	3/4	86 (3.39)	152 (5.98)	12.7 (0.50)	117 (4.62)	178 (7.0)	190 (7.5)	3.1 (6.8)	4.0 (8.8)	4.6 (10.1)
	1	99 (3.90)	188 (7.40)	17.5 (0.69)	127 (5.0)	203 (8.0)	216 (8.5)	4.9 (10.8)	6.2 (13.7)	6.8 (15.0)
	1-1/2	124 (4.88)	219 (8.62)	29.5 (1.16)	165 (6.5)	229 (9.0)	241 (9.5)	9.2 (20.3)	11.4 (25.1)	12.7 (28.0)
	2	138 (5.43)	260 (10.24)	35.0 (1.38)	203 (8.0)	267 (10.5)	292 (11.5)	13.9 (30.7)	15.4 (34.0)	16.3 (35.9)

CLASS 1500

Unit : mm (inch)

Port	Valve Size	Handwheel Diameter	Center to Top (Open)	Dia. of Port Openings	End to End	Approx. Wt, Kg (Lb)
Reduced	1/2	86 (3.39)	147 (5.79)	9.5 (0.37)	216 (8.5)	6.5 (14.3)
	3/4	99 (3.90)	185 (7.28)	12.7 (0.50)	229 (9.0)	9.0 (19.9)
	1	124 (4.88)	210 (8.27)	17.5 (0.69)	254 (10.0)	14.5 (32.0)
	1-1/2	138 (5.43)	245 (9.65)	29.5 (1.16)	305 (12.0)	23.3 (51.4)
	2	157 (6.18)	308 (12.13)	35.0 (1.38)	368 (14.25)	35.5 (78.3)

CLASS 2500

Unit : mm (inch)

Port	Valve Size	Handwheel Diameter	Center to Top (Open)	Dia. of Port Openings	End to End	Approx. Wt, Kg (Lb)
Full	1/2	124 (4.88)	339 (13.35)	10 (0.39)	264 (10.38)	19 (42)
	3/4	124 (4.88)	339 (13.35)	15 (0.59)	273 (10.75)	20 (44)
	1	200 (7.88)	386 (15.20)	18 (0.71)	308 (12.12)	37 (82)
	1-1/2	200 (7.88)	439 (17.29)	28 (1.10)	384 (15.12)	57 (126)
	2	250 (9.84)	480 (18.90)	35 (1.38)	451 (17.75)	83 (183)

*Specification given are subject to changed without further notice.

MERCOID
Tel: 03-5569 2933 (6 Lines) Fax: 03-5569 2588, 5569 2788
Email: mercoid@mercoid.com.my, valmicro@valmicro.com.my
http://www.mercoid.com.my

GLOBE VALVE

FORGED CARBON STEEL / STAINLESS STEEL

DONG KANG

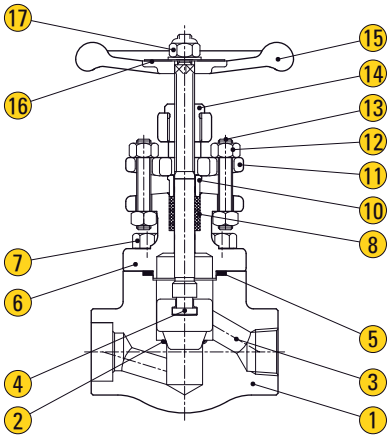

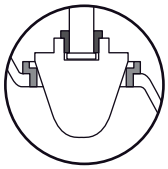

Option : Regulating Disc

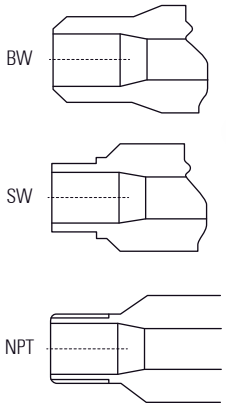

Y-Pattern Globe

FIG GD-*1-*2-*3

Note : *1 Class | *2 Material | *3 Connection

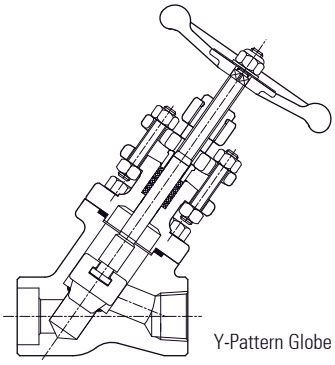

Y-Pattern Globe

SPECIFICATION

Face To Face Dimension	ASME B16.10
Preasure Rating	Class 150, 300, 600, 900, 1500 and 2500
End To End Dimension	ASME B16.10
Flange End Dimension	ASME B16.5
BW End Dimension	ASME B16.25

APPLICATION

Suitable for water, steam, oil, gases and non-abrasive media
(Refer to corrosion resistance table for valve materials selection).

CLASS 600 / 800

Unit : mm (inch)

Port	Valve Size	Handwheel Diameter	End to End	Center to Top (Open)	Dia. of Port Openings	Approx. Wt Kg (Lb)
Reduced	1/2	86 (3.39)	76 (2.99)	146 (5.75)	9.5 (0.37)	1.8 (4.0)
	3/4	86 (3.39)	86 (3.39)	152 (5.98)	12.7 (0.50)	2.1 (4.6)
	1	99 (3.90)	102 (4.02)	188 (7.40)	17.5 (0.69)	2.9 (6.4)
	1-1/4	124 (4.88)	152 (5.98)	219 (8.62)	22.5 (0.89)	6.4 (14.1)
	1-1/2	124 (4.88)	152 (5.98)	219 (8.62)	29.5 (1.16)	6.4 (14.1)
	2	138 (5.43)	172 (6.77)	260 (10.24)	35.0 (1.38)	9.7 (21.4)
Full	1/2	86 (3.39)	86 (3.39)	157 (6.18)	12.7 (0.50)	2.1 (4.6)
	3/4	99 (3.90)	102 (4.02)	190 (7.48)	17.5 (0.69)	2.9 (6.4)
	1	124 (4.88)	152 (5.98)	225 (8.86)	23.0 (0.91)	6.4 (14.1)
	1-1/4	138 (5.43)	172 (6.77)	267 (10.51)	29.5 (1.16)	9.7 (21.4)
	1-1/2	138 (5.43)	172 (6.77)	267 (10.51)	35.0 (1.38)	9.7 (21.4)
	2	157 (6.18)	218 (8.58)	324 (12.76)	45.5 (1.79)	14.0 (30.9)

CLASS 900 / 1500

Unit : mm (inch)

Port	Valve Size	Handwheel Diameter	End to End	Center to Top (Open)	Dia. of Port Openings	Approx. Wt Kg (Lb)
Reduced	1/2	86 (3.39)	86 (3.39)	147 (5.79)	9.5 (0.37)	2.0 (4.4)
	3/4	99 (3.90)	102 (4.02)	185 (7.28)	12.7 (0.50)	3.4 (7.5)
	1	124 (4.88)	152 (5.98)	210 (8.27)	17.5 (0.69)	6.5 (14.3)
	1-1/4	138 (5.43)	172 (6.77)	245 (9.65)	22.5 (0.89)	9.6 (21.2)
	1-1/2	138 (5.43)	172 (6.77)	245 (9.65)	29.5 (1.16)	9.6 (21.2)
	2	157 (6.18)	210 (8.27)	308 (12.13)	35.0 (1.38)	14.0 (30.9)

*Specification given are subject to changed without further notice.

CLASS 2500

Unit : mm (inch)

Port	Valve Size	Handwheel Diameter	End to End	Center to Top (Open)	Dia. of Port Openings	Approx. Wt Kg (Lb)
Reduced	1/2	140 (5.51)	110 (4.33)	238 (9.37)	10 (0.39)	5 (11)
	3/4	200 (7.87)	127 (5.00)	282 (11.10)	13 (0.51)	8 (18)
	1	230 (9.06)	155 (6.10)	322 (12.68)	18 (0.71)	13 (29)
	1-1/4	250 (9.84)	210 (8.27)	395 (15.55)	23 (0.91)	22 (49)
	1-1/2	250 (9.84)	210 (8.27)	395 (15.55)	26 (1.02)	22 (49)
	2	315 (12.4)	229 (9.02)	483 (19.02)	35 (1.38)	37 (82)

MATERIAL

	Parts	ASTM Designation												
		A105N	A350		A182					A182				
			LF2	LF3	F304/L	F316/L	F321	F347	F51	F5	F9	F11	F22	F91
1	Body	A105N	LF2	LF3	F304/L	F316/L	F321	F347	F51	F5	F9	F11	F22	F91
2	Seat	Integral Hardfaced Stellite 6												
3	Disc	A217-CA15		A351-CF8M+STL			A276 -321 +STL	A276 -347 +STL	UNS S31803 +STL	A217-CA15				
		A276-410+STL*		A276-316+STL*						A276-410+STL*				
4	Stem	A276-410		A276-304		A276 -316	A276 -321	A276 -347	UNS S31803	A276-410				
				A276-316*										
5	Gasket	304 Spiral Wound Graphite				316 SWG	321 SWG	347 SWG	Duplex SWG	304 Spiral Wound Graphite				
6	Bonnet	A105N	LF2	LF3	F304/L	F316/L	F321	F347	F51	F5	F9	F11	F22	F91
7	Bonnet Bolt	A193-B7	A320-L7		A193-B8					A193-B16				
8	Gland Packing	Graphoil												
10	Gland	316 Stainless Steel												
11	Gland Flange	A105		A182-F304						A105				
				A105*										
12	Gland Nut	A194-2H		A194-8						A194-2H				
				A194-2H*										
13	Gland Bolt	A193-B6		A193-B8						A193-B6				
		A193-B7*		A193-B7*						A193-B7*				
14	Yoke Bush	A582-416												
		High Tension Brass*												
15	Handwheel	A47												
16	Name Plate	Aluminium			304 Stainless Steel					Aluminium				
17	Handwheel Nut	A194-2H												

STL: Stellite 6 faced
SWG : Spiral Wound Graphite
A182-F304/L : Dual Certificate Material for A182-F304 & A182-F304L
A182-F316/L : Dual Certificate Material for A182-F316 & A182-F316L
DUPLEX : Duplex Stainless Steel
* ASME CLASS 1500 and Above

* Other materials also available on request

*Specification given are subject to changed without further notice.

GATE VALVE

Gate valve are primarily designed to start or stop flow, and when a straight-line flow of fluid and minimum flow restriction are needed. In service, these valves generally are either fully open or fully closed.

The disc of a gate valve is completely removed when the valve is fully open, the disc is fully drawn up into the valve bonnet. This leaves an opening for flow through the valve at the same internal diameter as the pipesystem in which the valve is installed. A gate valve can be used for a wide range of liquids and provides a tight seal when closed.

GATE VALVE

DIN STD/ ANSI STD (NRS & RS)
CL 125 : BODY - CAST IRON

CAST IRON / CARBON STEEL / STAINLESS STEEL

MERCOID
Tel: 03-5569 2933 (6 Lines) Fax: 03-5569 2588, 5569 2788
Email: mercoid@mercoid.com.my, valmicro@valmicro.com.my
http://www.mercoid.com.my

VARIMEX Valves® CO. LTD.

FIG 111

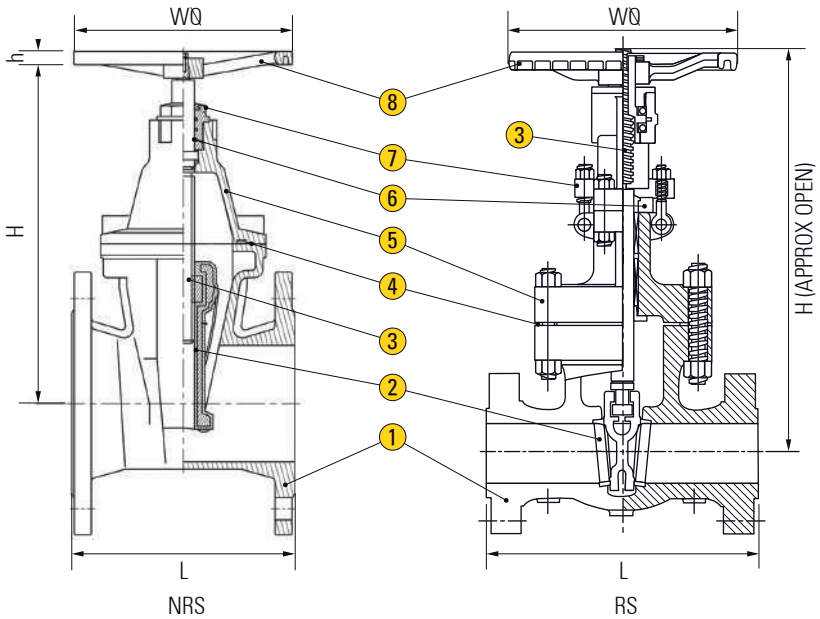

APPLICATION

Suitable for oil, water, steam and others non-abrasive media
(Refer to corrosion resistance table for valve materials selection).

SPECIFICATION

Face To Face Dimension	DIN 3202 F4 (optional F5, F7)
End Connection	Flanged End to DIN PN16
Preasure Rating	16 Bar
Working Temperature	Up to 150°C

MATERIAL

	Parts	FIG 111 - CI	FIG 111 - CS	FIG 111 - SS304 / SS316
1	Body	Cast Iron EN-GJL-250	Cast Steel GP240GH	Stainless Steel 1.4301 / 1.4408
2	Wedge	Stainless Steel X20Cr13	Stainless Steel X20Cr13	Stainless Steel F304 / F316
3	Stem	Stainless Steel X20Cr13	Stainless Steel X20Cr13	Stainless Steel F304 / F316
4	Bonnet Gasket	Graphite - CrNiSt	Graphite - CrNiSt	SS 304 / 316 + Graphite
5	Bonnet	Cast Iron EN-GJL-250	Cast Steel GP240GH	Stainless Steel 1.4301 / 1.4408
6	Packing	Graphite	Graphite	Graphite
7	Gland	Cast Iron EN-GJL-250	Forged Steel C 22.8	Stainless Steel F304 / F316
8	Handwheel	Cast Iron EN-GJL-250	Cast Steel GP240GH	Cast Steel GP240GH

PREASSURE-TEMPERATURE RATINGS ACC. DIN EN 1092-1/2

Material	Temperature										
	-10°C	20°C	100°C	120°C	150°C	200°C	250°C	300°C	350°C	400°C	450°C
PN16 - Cast Iron	16 Bar	16 Bar	16 Bar	16 Bar	14 Bar	13 Bar	11 Bar	10 Bar	-	-	-
PN40 - Cast Steel	40 Bar	40 Bar	40 Bar	40 Bar	37 Bar	35 Bar	32 Bar	28 Bar	24 Bar	21 Bar	18 Bar

DIMENSIONS (mm)

Size	inch	2	2 ½	3	4	5	6	8	10	12	14	16
	mm	50	65	80	100	125	150	200	250	300	350	400
DIN 3352 (PN16)	L	150	170	180	190	200	210	230	250	270	290	310
	H	216	238	261	310	365	407	504	602	680	762	836
	ØW	160	160	180	200	250	250	280	300	355	450	450
	Weight (Kg)	11	14	17	22	30	35	60	85	120	180	235
ANSI B16.5 (ANSI 150#)	L	178	190	203	229	254	267	292	330	356	381	406
	H	320	345	387	490	576	680	808	1010	1080	1258	1385
	ØW	200	200	200	254	300	300	345	400	450	505	556
	Weight (Kg)	20	26	32	50	70	89	141	218	315	457	570

*Specification given are subject to changed without further notice.

MERCOID
Tel: 03-5569 2933 (6 Lines) Fax: 03-5569 2588, 5569 2788
Email: mercoid@mercoid.com.my, valmicro@valmicro.com.my
http://www.mercoid.com.my

GATE VALVE API 6D

CARBON STEEL / STAINLESS STEEL

HAN KOOK VALVE
MADE IN KOREA

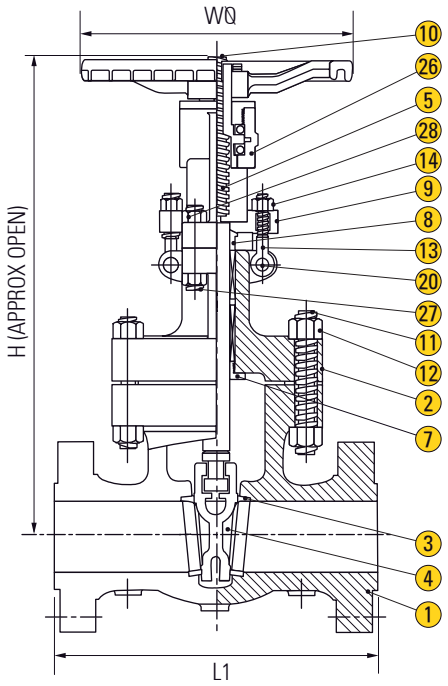

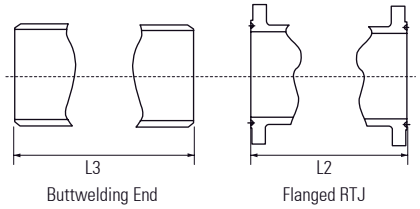

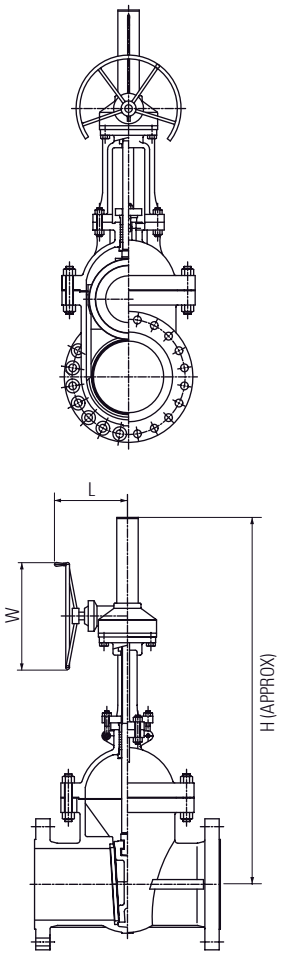

FIG GA-*1-*2-*3

Note : *1 Class | *2 Material | *3 Connection

SPECIFICATION

Designed and Manufactured	API 6D
Face To Face Dimension	ASME 16.10
Pressure Rating	Class 150, 300, 600, 900, 1500 and 2500
Flange End Dimension	ASME B16.5
BW End Dimension	ASME B16.25
Test and Inspection	API 598
Pressure - Temperature Rating	ASME B16.34

MATERIAL

Parts		ASTM Specification						
		Standard	High Temperature Service				Low Temperature Service	Corrosion Service
1	Body	A216-WCB	A217-WC1	A217-WC6	A217-WC9	A217-C5	A352-LCB	A351-CF8M
2	Bonnet	A216-WCB	A217-WC1	A217-WC6	A217-WC9	A217-C5	A352-LCB	A351-CF8M
3	Disc	A217-CA15	A217-WC1	A217-WC6	A217-WC9	A217-C5	A352-LCB	A351-CF8M
4	Body Seat Ring	A105+HARD FACE	A105+HARD FACE	A105+HARD FACE	A105+HARD FACE	A105+HARD FACE	A182-F304	A182-F316
5	Stem	A276-410	A276-410	A276-410	A276-410	A276-410	A276-304	A276-316
7	Bonnet Bush	A276-410	A276-410	A276-410	A276-410	A276-410	A276-304	A276-316
8	Packing Gland	A276-410	A276-410	A276-410	A276-410	A276-410	A276-F304	A276-316
9	Gland Flange	A105	A105	A105	A105	A105	A105	A351-CF8/A240-304
10	Stem Nut	A439-D2	A439-D2	A439-D2	A439-D2	A439-D2	A439-D2	A351-CF8/A240-304
11	Bonnet Bolt	A193-B7	A193-B7	A193-B7	A193-B16	A193-B16	A320-L7	A193-B8
12	Bonnet Nut	A194-2H	A194-2H	A194-2H	A194-4	A194-4	A194-4	A194-8
13	Gland Bolt	A307.B	A307.B	A307.B	A307.B	A307.B	A307.B	A193-B8
14	Gland Nut	A307.B	A307.B	A307.B	A307.B	A307.B	A307.B	A194-8
20	Hinge Pin	A276-410	A276-410	A276-410	A276-410	A276-410	A276-304	A276-304
26	Yoke	A216-WCB	A217-WC1	A217-WC6	A217-WC9	A217-C5	A352-LCB	A351-CF8M
27	Yoke Bolt	A193-B7	A193-B7	A193-B7	A193-B16	A193-B16	A320-L7	A193-B8
28	Yoke Nut	A194-2H	A194-2H	A194-2H	A194-4	A194-4	A194-4	A194-8

*Note : In case of 12" and larger size, We' ll use trim material overlayed one on the same or equivalent material of the body.

*Specification given are subject to changed without further notice.

CLASS 150 *(N/A for L2)

Valve Size	inch	2	2½	3	4	5	6	8	10	12	14	16	18	20	24	28	30	36	40
	mm	50	65	80	100	125	150	200	250	300	350	400	450	500	600	700	750	900	1000
L1	inch	7.0	7.5	8.0	9.0	10.0	10.5	11.5	13.0	14.0	15.0	16.0	17.0	18.0	20.0	24.0	24.0	28.0	30.0
	mm	178	191	203	229	254	267	292	330	356	381	406	432	457	508	610	610	711	762
L3	inch		9.5	11.12	12.0	15.0	15.88	16.5	18.0	19.75	22.5	24.0	26.0	28.0	32.0	36.0	36.0	40.4	42.0
	mm	216	241	283	305	381	403	419	457	502	572	610	660	711	813	914	914	1016	1067
H	inch	14.0	16.3	18.4	22.2	26.5	30.0	41.9	50.6	58.3	60.0	68.7	79.1	91.7	109.6	127.4	134.5	161.8	183.9
	mm	356	415	468	565	674	762	1065	1285	1480	1523	1745	2010	2330	2784	3236	3417	4109	4670
W	inch	7.7	7.7	8.5	9.4	11.0	11.8	14.0	15.7	17.7	13.8	13.8	13.8	17.7	17.7	22.0	22.0	27.9	31.5
	mm	195	195	215	240	280	300	355	400	450	350	350	350	450	450	560	560	710	800
L	inch	-	-	-	-	-	-	-	-	-	13.1	13.1	13.1	14.3	14.3	16.3	16.3	18.4	20.7
	mm	-	-	-	-	-	-	-	-	-	332	332	332	362	362	414	414	468	526
Weight	LB	44.1	55.1	66.2	97.0	132.3	154.4	233.7	368.2	526.9	760.7	1080.5	1274.5	1611.9	2280.0	3572.1	4057.2	7497.0	9481.5
	Kg	20	25	30	44	60	70	106	167	239	345	490	578	731	1043	1620	1840	3400	4300

CLASS 300

Valve Size	inch	2	2½	3	4	5	6	8	10	12	14	16	18	20	24	28	30	36	40	42
	mm	50	65	80	100	125	150	200	250	300	350	400	450	500	600	700	750	900	1000	1050
L1 & L3	inch	8.5	9.5	11.12	12.0	15.0	15.88	16.5	18.0	19.75	30.0	33.0	36.0	39.0	45.0	53.0	55.0	68.0	76.0	78.0
	mm	216	241	283	305	381	403	419	457	502	762	838	914	991	1143	1346	1397	1727	1930	1981
L2	inch	9.12	10.12	11.47	12.62	15.63	16.5	17.12	18.62	20.37	30.62	33.62	36.62	39.75	45.88	54.0	56.0	69.12	-	-
	mm	216	257	298	321	397	419	435	473	518	778	854	930	1010	1165	1372	1422	1756	-	-
H	inch	16.3	17.5	20.5	23.2	28.3	33.3	40.4	48.2	61.4	60.0	68.7	79.1	91.7	109.6	130.0	148.5	169.8	188.6	198.1
	mm	415	445	520	590	720	845	1025	1225	1560	1523	1745	2010	2330	2784	3302	3772	4312	4791	5032
W	inch	7.7	7.7	8.5	9.4	11.0	14.0	15.7	17.7	19.7	17.7	17.7	22.0	22.0	27.9	35.4	35.4	30.0	30.0	30.0
	mm	195	195	215	240	280	355	400	450	500	450	450	560	560	710	900	900	760	760	760
L	inch	-	-	-	-	-	-	-	-	-	14.3	14.3	16.3	16.3	18.4	21.8	21.8	21.8	20.2	20.2
	mm	-	-	-	-	-	-	-	-	-	362	362	414	414	468	554	554	554	512	512
Weight	LB	52.9	75.0	90.4	143.3	209.5	257.9	401.3	368.2	1060.6	1528.1	2094.8	2535.8	3307.5	4961.3	6637.1	8180.6	11002.9	13528.8	14994.0
	Kg	24	34	41	65	95	117	182	355	481	693	950	1150	1500	2250	3010	3710	4990	6160	6800

CLASS 600

Valve Size	inch	2	2½	3	4	5	6	8	10	12	14	16	18	20	24
	mm	50	65	80	100	125	150	200	250	300	350	400	450	500	600
L1 & L3	inch	11.5	13.0	14.0	17.0	20.0	22.0	26.0	31.0	33.0	35.0	39.0	43.0	47.0	55.0
	mm	292	330	356	432	580	556	660	787	838	889	991	1092	1194	1397
L2	inch	11.62	13.12	14.12	17.12	19.57	22.12	26.12	31.12	33.12	35.12	39.12	43.12	47.25	55.38
	mm	295	333	359	435	497	562	664	791	841	892	991	1095	1200	1406
H	inch	18.7	21.6	23.5	26.8	31.5	36.6	45.7	53.1	61.8	72.1	82.9	98.0	104.8	116.9
	mm	475	550	598	680	800	930	1160	1350	1570	1832	2106	2489	2662	2970
W	inch	7.7	7.7	9.4	11.8	14.0	17.7	17.7	19.7	22.0	22.0	27.9	27.9	31.5	35.4
	mm	195	195	240	300	355	450	450	500	560	560	710	710	800	900
L	inch	-	-	-	-	-	-	-	-	16.3	16.3	18.4	18.4	20.7	26.4
	mm	-	-	-	-	-	-	-	-	414	414	468	468	526	670
Weight	LB	79.4	127.9	154.4	269.0	441	551.2	893.0	1433.2	1896.3	2734.2	3109.1	4890.7	6198.3	8656.8
	Kg	36	58	70	122	200	250	405	650	860	1240	1410	2218	2811	3926

CLASS 900

Valve Size	inch	2	2½	3	4	5	6	8	10	12	14	16	18	20	24
	mm	50	65	80	100	125	150	200	250	300	350	400	450	500	600
L1 & L3	inch	14.5	16.5	15.0	18.0	22.0	24.0	29.0	33.0	38.0	40.5	44.5	48.0	52.0	61.0
	mm	368	419	381	457	559	610	737	838	965	1029	1130	1219	1321	1549
L2	inch	14.62	16.62	15.12	18.12	22.13	24.12	29.12	33.12	38.12	40.88	44.88	48.5	52.5	61.75
	mm	371	422	384	460	562	613	740	841	968	1038	1140	1232	1334	1568
H	inch	21.2	26.4	26.4	30.8	37.1	42.4	55.5	67.7	77.4	74.9	80.7	88.8	110.2	124.0
	mm	539	670	670	782	943	1076	1411	1720	1965	1902	2051	2256	2800	3150
W	inch	11.8	11.8	14.0	15.7	19.7	22.0	17.7	22.0	22.0	24.0	24.0	30.0	30.0	24.0
	mm	300	300	355	400	500	560	450	560	560	610	610	760	760	610
L	inch	-	-	-	-	-	-	14.3	16.3	16.3	20.2	20.2	21.8	21.8	20.2
	mm	-	-	-	-	-	-	362	414	414	512	512	554	554	512
Weight	LB	181	341.8	364	384	661.5	999	1720	2752	3400	4895.1	6615	8533.4	10716.3	16096.5
	Kg	82	155	165	174	300	453	780	1248	1542	2220	3000	3870	4860	7300

CLASS 1500

Valve Size	inch	2	2½	3	4	5	6	8	10	12	14	16
	mm	50	65	80	100	125	150	200	250	300	350	400
L1 & L3	inch	14.5	16.5	18.5	21.5	26.5	27.75	32.75	39.0	44.5	49.5	54.5
	mm	368	419	470	546	673	705	832	991	1130	1257	1384
L2	inch	14.62	16.62	18.62	21.62	26.61	28.0	33.13	39.38	45.12	50.25	55.38
	mm	371	422	473	549	676	711	842	1000	1146	1276	1407
H	inch	21.2	26.4	29.1	30.8	43.62	47.0	60.8	66.5	82.3	85.1	97.9
	mm	539	670	738	783	1108	1196	1546	1688	1090	2167	2486
W	inch	11.8	11.8	15.7	19.7	24.8	13.8	22.0	27.9	27.9	30.0	30.0
	mm	300	300	400	500	630	350	560	710	710	760	760
L	inch	-	-	-	-	-	13.1	16.3	18.4	18.4	21.8	21.8
	mm	-	-	-	-	-	332	414	468	468	554	554
Weight	LB	181	341.8	401	573	926.1	1360	3175	4412	8417	9073.6	15324.8
	Kg	82	155	182	260	420	617	1440	2001	3816	4115	6950

CLASS 2500

Valve Size	inch	2	2½	3	4	6	8	10	12
	mm	50	65	80	100	150	200	250	300
L1 & L3	inch	17.75	20.0	22.75	26.5	36.0	40.25	50.0	56.0
	mm	451	508	578	673	914	1022	1270	1422
L2	inch	17.87	20.25	23.0	26.88	36.5	40.87	50.88	56.88
	mm	454	514	584	683	927	1038	1292	1445
H	inch	27.56	29.53	34.92	43.19	57.09	63.39	81.73	89.8
	mm	700	750	887	1079	1450	1610	2076	2281
W	inch	14.0	18.0	18.0	20.0	24.0	24.0	24.0	24.0
	mm	350	450	450	500	610	610	610	610
L	inch	-	-	-	-	-	-	-	-
	mm	-	-	-	-	-	-	-	-
Weight	LB	297.6	463.0	597.5	1115.5	3527.4	5401.3	10075.1	15763.1
	Kg	135	210	271	506	1600	2450	4570	7150

*Specification given are subject to changed without further notice.

MERCOID
Tel: 03-5569 2933 (6 Lines) Fax: 03-5569 2588, 5569 2788
Email: mercoid@mercoid.com.my, valmicro@valmicro.com.my
http://www.mercoid.com.my

GATE VALVE FLANGE

FORGED CARBON STEEL / STAINLESS STEEL

DONG KANG

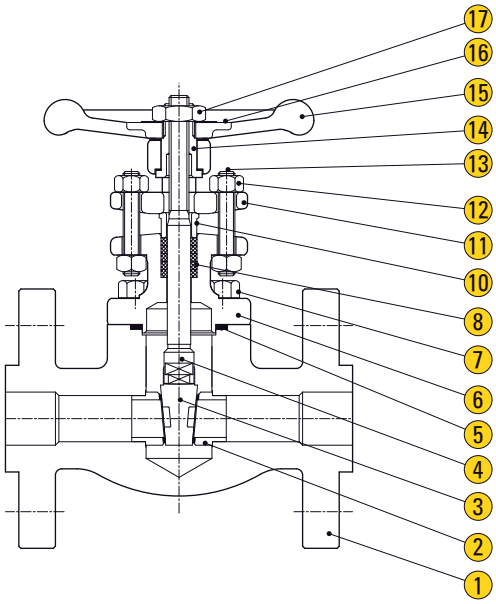

FIG GT-*1-*2-*3

Note : *1 Class | *2 Material | *3 Connection

APPLICATION

Suitable for water, steam, oil, gases and non-abrasive media
(Refer to corrosion resistance table for valve materials selection).

SPECIFICATION

Face To Face Dimension	ASME B16.10
Preasure Rating	Class 150, 300, 600, 1500 and 2500
End To End Dimension	ASME B16.10
Flange End Dimension	ASME B16.5
BW End Dimension	ASME B16.25

CLASS 150 - 300 - 600

Unit : mm (inch)

Port	Valve Size	Handwheel Diameter	Center to Top (Open)	Dia. of Port Openings	End to End			Approx. Wt, Kg (Lb)		
					Class 150	Class 300	Class 600	Class 150	Class 300	Class 600
Reduced	1/2	86 (3.39)	145 (5.71)	9.8 (0.39)	108 (4.25)	140 (5.50)	165 (6.50)	2.5 (5.5)	3.0 (6.6)	3.3 (7.3)
	3/4	86 (3.39)	151 (5.95)	13.0 (0.51)	117 (4.62)	152 (6.00)	190 (7.50)	3.1 (6.8)	4.0 (8.8)	4.6 (10.1)
	1	99 (3.90)	190 (7.48)	18.0 (0.71)	127 (5.0)	165 (6.50)	216 (8.50)	4.7 (10.4)	6.0 (13.2)	6.6 (14.6)
	1-1/2	124 (4.88)	241 (9.49)	31.0 (1.22)	165 (6.5)	190 (7.50)	241 (9.50)	8.7 (19.2)	11.0 (24.3)	12.2 (26.9)
	2	138 (5.43)	271 (10.67)	37.0 (1.46)	178 (7.0)	216 (8.50)	292 (11.50)	12.2 (26.9)	14.0 (30.9)	15.8 (34.8)

CLASS 1500

Unit : mm (inch)

Port	Valve Size	Handwheel Diameter	Center to Top (Open)	Dia. of Port Openings	End to End	Approx. Wt, Kg (Lb)
Reduced	1/2	86 (3.39)	153 (6.02)	9.8 (0.39)	216 (8.50)	6.5 (14.3)
	3/4	99 (3.90)	190 (7.58)	13.0 (0.51)	229 (9.00)	9.0 (19.9)
	1	124 (4.88)	230 (9.06)	18.0 (0.71)	254 (10.00)	13.8 (30.4)
	1-1/2	138 (5.43)	272 (10.71)	31.0 (1.22)	305 (12.00)	22.2 (49.0)
	2	157 (6.18)	325 (12.80)	37.0 (1.46)	368 (14.25)	33.2 (73.2)

CLASS 2500

Unit : mm (inch)

Port	Valve Size	Handwheel Diameter	Center to Top (Open)	Dia. of Port Openings	End to End	Approx. Wt, Kg (Lb)
Full	1/2	124 (4.88)	311 (12.24)	12.7 (0.50)	264 (10.38)	18 (40)
	3/4	124 (4.88)	311 (12.24)	12.7 (0.50)	273 (10.75)	19 (42)
	1	200 (7.88)	388 (15.27)	18.0 (0.71)	308 (12.12)	35 (77)
	1-1/2	200 (7.88)	430 (16.93)	25.4 (1.00)	384 (15.12)	54 (119)
	2	250 (9.84)	480 (18.90)	31.8 (1.25)	351 (17.75)	82 (181)

*Specification given are subject to changed without further notice.

GATE VALVE

FORGED CARBON STEEL / STAINLESS STEEL

MERCOID
Tel: 03-5569 2933 (6 Lines) Fax: 03-5569 2588, 5569 2788
Email: mercoid@mercoid.com.my, valmicro@valmicro.com.my
http://www.mercoid.com.my

DONG KANG

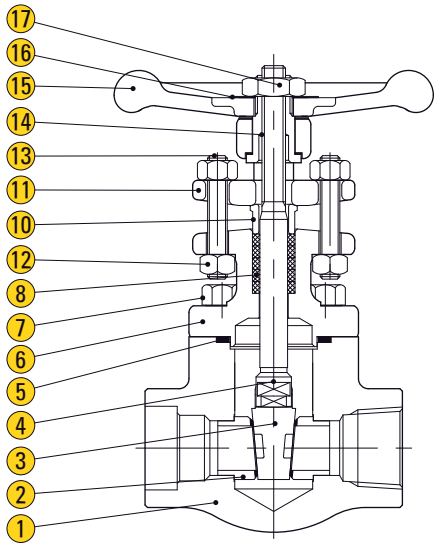

FIG GT-*1-*2-*3

Note : *1 Class | *2 Material | *3 Connection

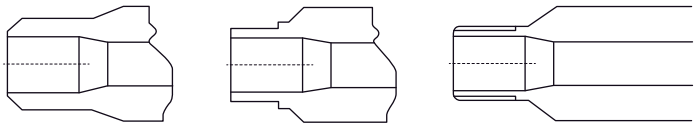

BW SW NPT

APPLICATION

Suitable for water, steam, oil, gases and non-abrasive media
(Refer to corrosion resistance table for valve materials selection).

SPECIFICATION

Face To Face Dimension	ASME B16.10
Preasure Rating	Class 600, 800, 1500 and 2500
End To End Dimension	ASME B16.10
Flange End Dimension	ASME B16.5
BW End Dimension	ASME B16.25

CLASS 600 / 800

Unit : mm (inch)

Port	Valve Size	Handwheel Diameter	End to End	Center to Top (Open)	Dia. of Port Openings	Approx. Wt Kg (Lb)
Reduced	1/2	86 (3.39)	76 (2.99)	145 (5.71)	9.8 (0.39)	1.5 (3.3)
	3/4	86 (3.39)	86 (3.39)	151 (5.95)	13.0 (0.51)	2.0 (4.4)
	1	99 (3.90)	102 (4.02)	190 (7.48)	18.0 (0.71)	2.8 (6.2)
	1-1/4	124 (4.88)	117 (4.61)	241 (9.49)	31.0 (1.22)	5.2 (11.5)
	1-1/2	124 (4.88)	117 (4.61)	241 (9.49)	31.0 (1.22)	5.2 (11.5)
	2	138 (5.43)	133 (5.24)	271 (10.67)	37.0 (1.46)	8.2 (18.8)
Full	1/2	86 (3.39)	86 (3.39)	151 (5.95)	13.0 (0.51)	2.0 (4.4)
	3/4	99 (3.90)	102 (4.02)	190 (7.48)	18.0 (0.71)	2.8 (6.2)
	1	124 (4.88)	117 (4.61)	241 (9.49)	23.0 (0.91)	5.2 (11.5)
	1-1/4	138 (5.43)	133 (5.24)	271 (10.67)	37.0 (1.46)	8.2 (18.8)
	1-1/2	138 (5.43)	133 (5.24)	271 (10.67)	37.0 (1.46)	8.2 (18.8)
	2	157 (6.18)	218 (8.58)	318 (12.52)	50.8 (2.00)	12.7 (28.0)

CLASS 1500

Unit : mm (inch)

Port	Valve Size	Handwheel Diameter	End to End	Center to Top (Open)	Dia. of Port Openings	Approx. Wt Kg (Lb)
Reduced	1/2	86 (3.39)	86 (3.39)	151 (5.95)	9.8 (0.39)	2.0 (4.4)
	3/4	99 (3.90)	102 (4.02)	190 (7.48)	13.0 (0.51)	3.4 (7.5)
	1	124 (4.88)	117 (4.61)	241 (9.49)	18.0 (0.71)	5.8 (12.8)
	1-1/4	138 (5.43)	133 (5.24)	271 (10.67)	31.0 (1.22)	8.5 (18.7)
	1-1/2	138 (5.43)	133 (5.24)	271 (10.67)	31.0 (1.22)	8.5 (18.7)
	2	157 (6.18)	210 (8.27)	325 (12.80)	37.0 (1.46)	11.7 (25.8)

*Specification given are subject to changed without further notice.

CLASS 2500

Unit : mm (inch)

Port	Valve Size	Handwheel Diameter	End to End	Center to Top (Open)	Dia. of Port Openings	Approx. Wt Kg (Lb)
Full	1/2	140 (5.51)	110 (4.33)	227 (8.94)	12.0 (0.47)	5.0 (11.0)
	3/4	200 (7.87)	127 (5.00)	270 (10.63)	16.0 (0.63)	8.0 (18.0)
	1	230 (9.06)	155 (6.10)	324 (12.76)	21.0 (0.83)	13.0 (30.0)
	1-1/4	250 (9.84)	210 (8.27)	390 (15.35)	32.0 (1.26)	23.0 (52.0)
	1-1/2	250 (9.84)	210 (8.27)	390 (15.35)	32.0 (1.26)	23.0 (52.0)
	2	315 (12.4)	229 (9.02)	487 (19.17)	38.0 (1.50)	38.0 (84.0)

MATERIAL

	Parts	ASTM Designation												
		A105N	A350		A182					A182				
			LF2	LF3	F304/L	F316/L	F321	F347	F51	F5	F9	F11	F22	F91
1	Body	A105N	LF2	LF3	F304/L	F316/L	F321	F347	F51	F5	F9	F11	F22	F91
2	Seat Ring	A276-410+STL		A276-316+STL			A276 -321 +STL	A276 -347 +STL	UNS S31803 +STL	A276-410+STL				
		A105 +STL*	LF2 +STL*							F5 +STL*	F9 +STL*	F11 +STL*	F22 +STL*	F91 +STL*
3	Wedge	A217-CA15		A351-CF8M+STL			A276 -321 +STL	A276 -347 +STL	UNS S31803 +STL	A217-CA15				
		A276-410*		A276-316+STL*						A276-410+STL*				
4	Stem	A276-410		A276-304		A276 -316	A276 -321	A276 -347	UNS S31803	A276-410				
				A276-316*										
5	Gasket	304 Spiral Wound Graphite				316 SWG	321 SWG	347 SWG	Duplex SWG	304 Spiral Wound Graphite				
6	Bonnet	A105N	LF2	LF3	F304/L	F316/L	F321	F347	F51	F5	F9	F11	F22	F91
7	Bonnet Bolt	A193-B7	A320-L7		A193-B8					A193-B16				
8	Gland Packing	Graphoil												
10	Gland	316 Stainless Steel												
11	Gland Flange	A105		A182-F304						A105				
				A105*										
12	Gland Nut	A194-2H		A194-8						A194-2H				
				A194-2H*										
13	Gland Bolt	A193-B6		A193-B8						A193-B6				
		A193-B7*		A193-B7*						A193-B7*				
14	Yoke Sleeve	A582-416												
		High Tension Brass*												
15	Handwheel	A47												
16	Name Plate	Aluminium			304 Stainless Steel					Aluminium				
17	Handwheel Nut	A563-A												

STL: Stellite 6 faced
SWG : Spiral Wound Graphite
A182-F304/L : Dual Certificate Material for A182-F304 & A182-F304L
A182-F316/L : Dual Certificate Material for A182-F316 & A182-F316L
DUPLEX : Duplex Stainless Steel
* ASME CLASS 1500 and Above

* Other materials also available on request

*Specification given are subject to changed without further notice.

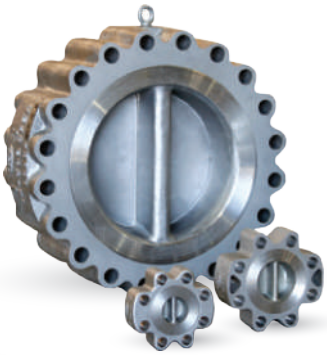

CHECK VALVE

Check valves are "automatic" valves that open with forward flow and close with reverse flow. The pressure of the fluid passing through a system opens the valve, while any reversal of flow will close the valve. Exact operation will vary depending on the type of check valve mechanism. Most common types of check valves are swing, lift (piston and ball), duo-plate, stop and tilting-disc.

MERCOID
Tel: 03-5569 2933 (6 Lines) Fax: 03-5569 2588, 5569 2788
Email: mercoid@mercoid.com.my, valmicro@valmicro.com.my
http://www.mercoid.com.my

CHECK VALVE LIFT

CAST IRON / CARBON STEEL / STAINLESS STEEL

VARIMEX Valves® CO. LTD.

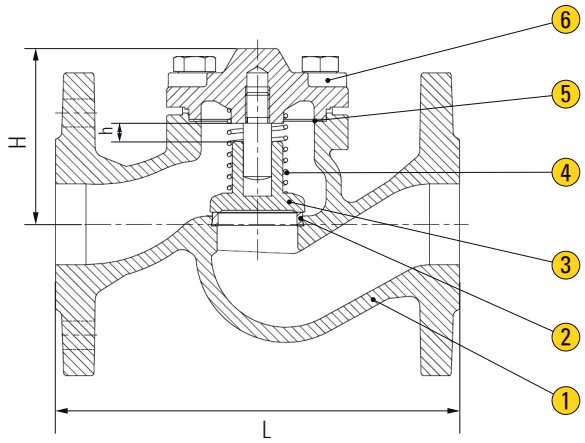

FIG 292

APPLICATION

Suitable for water, steam, oil, gases and others non-abrasive media
(Refer to corrosion resistance table for valve materials selection).

SPECIFICATION

Face To Face Dimension	According to EN 558-1 Series 1
End Connection	Flanged End to DIN PN16 and PN40

MATERIAL

	Parts	FIG 292 - CI	FIG 292 - CS	FIG 292 - SS304 / SS316
1	Body	Cast Iron EN-GJL-250	Cast Steel GP240GH	Stainless Steel 1.4301 / 1.4408
2	Seat Ring	Stainless Steel X20Cr13	Stainless Steel X20Cr13	Stainless Steel F304 / F316
3	Disc	Stainless Steel X20Cr13	Stainless Steel X20Cr13	Stainless Steel F304 / F316
4	Spring	Stainless Steel X17CrNi16-2	Stainless Steel X17CrNi16-2	Stainless Steel X17CrNi16-2
5	Bonnet Gasket	Graphite - CrNiSt	Graphite - CrNiSt	SS304 / 316 + Graphite
6	Bonnet	Cast Iron EN-GJL-250	Cast Steel GP240GH	Stainless Steel 1.4301 / 1.4408

PREASSURE-TEMPERATURE RATINGS ACC. DIN EN 1092-1/2

Material	Temperature										
	-10°C	20°C	100°C	120°C	150°C	200°C	250°C	300°C	350°C	400°C	450°C
PN16 - Cast Iron	16 Bar	16 Bar	16 Bar	16 Bar	14 Bar	13 Bar	11 Bar	10 Bar	-	-	-
PN40 - Cast Steel	40 Bar	40 Bar	40 Bar	40 Bar	37 Bar	35 Bar	32 Bar	28 Bar	24 Bar	21 Bar	18 Bar

DIMENSIONS (mm)

Size (mm)	15	20	25	32	40	50	65	80	100	125	150	200	250	300
L	130	150	160	180	200	230	290	310	350	400	480	600	730	850
H - PN16	56	56	67	76	89	96	104	124	161	174	197	248	325	375
H - PN40	70	70	80	105	112	122	150	170	195	198	220	268	360	375
h	5	5	8	8	11	14	17	21	25	32	38	50	65	95
Weight (Kg) - PN16	2.1	2.7	3.8	7	7	9.5	15	20	29	41	66	111	198	278
Weight (Kg) - PN40	3.5	5.4	5.5	9.1	10.4	12.6	10	31	41	54	76	150	240	374

*Specification given are subject to changed without further notice.

SWING CHECK VALVE API 6D

CARBON STEEL / STAINLESS STEEL

MERCOID
Tel: 03-5569 2933 (6 Lines) Fax: 03-5569 2588, 5569 2788
Email: mercoid@mercoid.com.my, valmicro@valmicro.com.my
http://www.mercoid.com.my

HAN KOOK VALVE
MADE IN KOREA

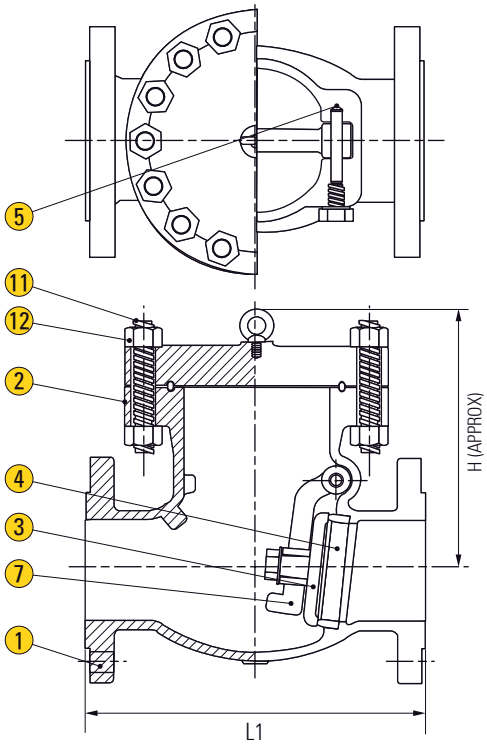

FIG SC-*1-*2-*3

Note : *1 Class | *2 Material | *3 Connection

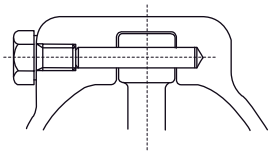

All Size

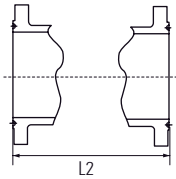

L2
Flanged RTJ

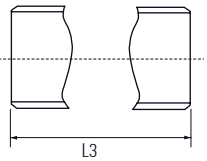

L3
Buttwelding End

SPECIFICATION

Designed and Manufactured	API 6D
Face To Face Dimension	ASME 16.10
Pressure Rating	Class 150, 300, 600, 900, 1500 and 2500
Flange End Dimension	ASME B16.5
BW End Dimension	ASME B16.25
Test and Inspection	API 598
Pressure - Temperature Rating	ASME B16.34

MATERIAL

Parts		ASTM Specification						
		Standard	High Temperature Service				Low Temperature Service	Corrosion Service
1	Body	A216-WCB	A217-WC1	A217-WC6	A217-WC9	A217-C5	A352-LCB	A351-CF8M
2	Cover	A216-WCB	A217-WC1	A217-WC6	A217-WC9	A217-C5	A352-LCB	A351-CF8M
3	*Disc	A217-CA15	A217-WC1	A217-WC6	A217-WC9	A217-C5	A352-LCB	A351-CF8M
4	Body Seat Ring	A105+HARD FACE	A105+HARD FACE	A105+HARD FACE	A105+HARD FACE	A105+HARD FACE	A182-F304	A182-F316
5	Hinge Pin	A276-410	A276-410	A276-410	A276-410	A276-410	A276-304	A276-316
7	Arm	A216-WCB	A216-WC1	A216-WC6	A216-WC9	A217-C5	A352-LCB	A351-CF8H
11	Cover Bolt	A193-B7	A193-B7	A193-B7	A193-B16	A193-B16	A320-L7	A193-B8
12	Cover Nut	A194-2H	A194-2H	A194-2H	A194-4	A194-4	A194-4	A194-8

*Note : In case of 12" and larger size, We' ll use trim material overlayed one on the same or equivalent material of the body.

*Specification given are subject to changed without further notice.

CLASS 150 *(N/A for L2)

Valve Size	inch	2	2½	3	4	5	6	8	10	12	14	16	18	20	24	28	30
	mm	50	65	80	100	125	150	200	250	300	350	400	450	500	600	700	750
L1 & L3	inch	8.0	8.5	9.5	11.5	13.0	14.0	19.5	24.5	27.5	31.0	34.0	38.5	38.5	51.0	57.0	60.0
	mm	203	216	241	292	330	356	495	622	699	787	864	978	978	1295	1448	1524
H	inch	6.1	6.7	7.3	7.9	9.3	10.0	12.0	13.6	15.0	18.1	21.5	25.6	26.4	35.4	40.0	45.2
	mm	155	170	185	200	235	255	305	345	380	460	545	650	670	900	1016	1149
Weight	LB	33.1	48.5	59.5	90.4	143.3	176.4	313.1	390.3	639.5	862.2	1016.5	1411.2	1719.9	3285.5	4520.3	6392.3
	Kg	15	22	27	41	65	80	142	177	290	391	461	640	780	1490	2050	2899

CLASS 300

Valve Size	inch	2	2½	3	4	5	6	8	10	12	14	16	18	20	24	28
	mm	50	65	80	100	125	150	200	250	300	350	400	450	500	600	700
L1 & L3	inch	10.5	11.5	12.5	14.0	15.75	17.5	21.0	24.5	28.0	33.0	34.0	38.5	40.0	53.0	59.0
	mm	267	292	318	356	400	444	533	622	711	838	864	978	1016	1346	1499
L2	inch	11.12	12.12	13.12	14.62	16.38	18.12	21.62	25.12	28.62	33.62	34.62	39.12	40.75	53.88	60.0
	mm	283	308	333	371	416	460	549	638	727	854	880	994	1035	1369	1524
H	inch	6.9	7.5	8.1	8.7	11.6	12.8	14.5	18.6	20.9	22.8	27.4	31.4	30.6	39.6	45.2
	mm	175	190	205	220	295	326	368	473	530	580	695	797	776	1007	1149
Weight	LB	41.9	66.2	77.2	119.1	198.5	282.4	463.1	590.9	915	1503.8	1647.1	2756.3	3307.5	4917.2	6504.8
	Kg	19	30	35	54	90	128	210	268	415	682	747	1250	1500	2230	2950

CLASS 600

Valve Size	inch	2	2½	3	4	5	6	8	10	12	14	16	18	20	24
	mm	50	65	80	100	125	150	200	250	300	350	400	450	500	600
L1 & L3	inch	11.5	13.0	14.0	17.0	20.0	22.0	26.0	31.0	33.0	35.0	39.0	43.0	47.0	55.0
	mm	292	330	356	432	508	559	660	787	838	889	991	1092	1194	1397
L2	inch	11.62	13.12	14.12	17.12	20.12	22.12	26.12	31.12	33.12	35.12	39.12	43.12	47.25	55.38
	mm	295	333	359	435	511	562	664	791	841	892	994	1095	1200	1407
H	inch	7.5	8.3	9.6	11.8	13.3	15.7	16.9	20.7	24.2	27.6	32.0	37.8	40.5	47.3
	mm	190	210	235	300	337	400	430	525	615	700	812	960	1029	1202
Weight	LB	77.2	119.1	141.1	229.3	330.8	449.8	793.8	1367.1	1775.0	2306.4	2976.8	4454.1	5269.9	7717.5
	Kg	35	54	64	104	150	204	360	620	805	1046	1350	2020	2390	3500

CLASS 900

Valve Size	inch	2	2½	3	4	5	6	8	10	12	14	16
	mm	50	65	80	100	125	150	200	250	300	350	400
L1 & L3	inch	14.5	16.5	15.0	18.0	22.0	24.0	29.0	33.0	38.0	40.5	44.5
	mm	368	419	381	457	559	610	737	838	965	1029	1130
L2	inch	14.62	16.62	15.12	18.12	22.13	24.12	29.12	33.12	38.12	40.88	44.88
	mm	371	422	384	460	562	613	740	841	968	1038	1140
H	inch	13.1	13.7	12.6	16.7	17.4	18.9	22.2	28.3	30.7	31.8	33.0
	mm	333	349	321	423	441	479	565	721	781	807	838
Weight	LB	154.4	242.6	242.6	471.4	735.6	837.9	1375.9	2535.8	3197.3	3858.8	5336.1
	Kg	70	110	110	214	320	380	624	1150	1450	1750	2420

CLASS 1500

Valve Size	inch	2	2½	3	4	5	6	8	10	12	14
	mm	50	65	80	100	125	150	200	250	300	350
L1 & L3	inch	14.5	16.5	18.5	21.5	26.5	27.75	32.75	39.0	44.5	49.5
	mm	368	419	470	546	673	705	832	991	1130	1257
L2	inch	14.62	16.62	18.62	21.62	26.61	28.0	33.13	39.38	45.12	50.25
	mm	371	422	473	549	676	711	842	1000	1146	1276
H	inch	13.1	13.7	15.3	16.5	18.9	23.1	26.8	29.8	39.7	40.8
	mm	333	349	389	419	479	587	680	756	1008	1035
Weight	LB	154.4	242.6	374.9	661.5	1036.4	1532.5	2624.0	4079.3	7342.7	7938
	Kg	70	110	170	300	470	695	1190	1850	3330	3600

CLASS 2500

Valve Size	inch	2	2½	3	4	6	8	10	12
	mm	50	65	80	100	150	200	250	300
L1 & L3	inch	17.75	20.0	22.75	26.5	36.0	40.25	50.0	56.0
	mm	451	508	578	673	914	1022	1270	1422
L2	inch	17.87	20.25	23.0	26.88	36.5	40.87	50.88	56.88
	mm	454	514	584	683	927	1038	1292	1445
H	inch	16.38	16.5	17.36	18.86	20.12	27.99	33.5	39.37
	mm	416	419	441	479	511	711	851	1000
Weight	LB	319.7	529.1	727.5	1433.0	3086.5	5335.2	8267.3	12125.4
	Kg	145	240	330	650	1400	2420	3750	5500

*Specification given are subject to changed without further notice.

LIFT / SWING CHECK VALVE
FLANGE
FORGED CARBON STEEL / STAINLESS STEEL

MERCOID
Tel: 03-5569 2933 (6 Lines) Fax: 03-5569 2588, 5569 2788
Email: mercoid@mercoid.com.my, valmicro@valmicro.com.my
http://www.mercoid.com.my

DONG KANG

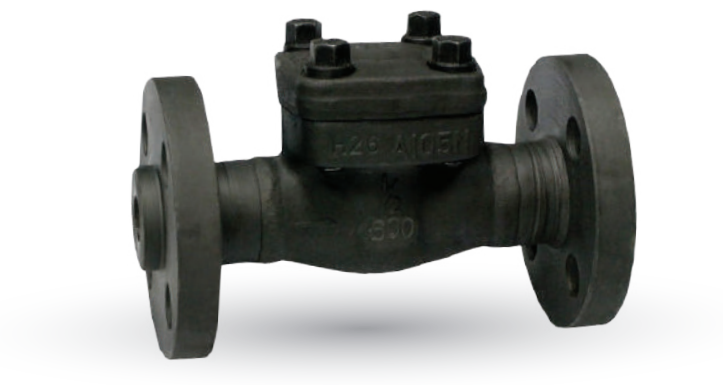

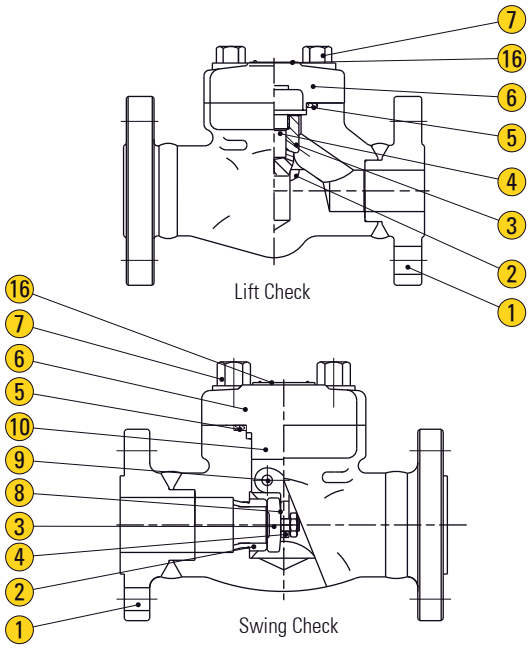

FIG LC/SC-*1-*2-*3

Note : *1 Class | *2 Material | *3 Connection

APPLICATION

Suitable for water, steam, oil, gases and non-abrasive media
(Refer to corrosion resistance table for valve materials selection).

SPECIFICATION

Face To Face Dimension	ASME B16.10
Preasure Rating	Class 150, 300, 600, 1500 and 2500
End To End Dimension	ASME B16.10
Flange End Dimension	ASME B16.5
BW End Dimension	ASME B16.25

CLASS 150 - 300 - 600

Unit : mm (inch)

Port	Valve Size	Center to Top	Dia. of Port Openings	End to End			Approx. Wt, Kg (Lb)		
				Class 150	Class 300	Class 600	Class 150	Class 300	Class 600
Reduced	1/2	48 (1.89)	9.5 (0.37)	108 (4.25)	152 (6.00)	165 (6.50)	1.7 (3.8)	2.2 (4.9)	2.5 (5.5)
	3/4	54 (2.13)	12.7 (0.50)	117 (4.62)	178 (7.00)	190 (7.50)	2.4 (5.3)	3.3 (7.3)	3.9 (8.6)
	1	63 (2.48)	17.5 (0.69)	127 (5.00)	203 (8.00)	216 (8.50)	3.8 (8.4)	5.1 (11.3)	5.7 (12.6)
	1-1/2	81 (3.19)	29.5 (1.16)	165 (6.50)	229 (9.00)	241 (9.50)	7.7 (17.0)	9.9 (21.8)	11.5 (25.4)
	2	105 (4.13)	35.0 (1.38)	203 (8.00)	267 (10.50)	292 (11.50)	11.4 (25.1)	13.0 (28.7)	13.8 (30.4)

CLASS 1500

Unit : mm (inch)

Port	Valve Size	Center to Top	Dia. of Port Openings	End to End	Approx. Wt, Kg (Lb)
Reduced	1/2	54 (2.13)	9.5 (0.37)	216 (8.50)	5.8 (12.8)
	3/4	63 (2.48)	12.7 (0.50)	229 (9.00)	7.8 (17.2)
	1	81 (3.19)	17.5 (0.69)	254 (10.00)	13.0 (28.7)
	1-1/2	105 (4.13)	29.5 (1.16)	305 (12.00)	20.7 (45.6)
	2	128 (5.04)	35.0 (1.38)	368 (14.25)	30.6 (67.5)

CLASS 2500

Unit : mm (inch)

Port	Valve Size	Center to Top	Dia. of Port Openings	End to End	Approx. Wt, Kg (Lb)
Full	1/2	180 (7.09)	10.0 (0.39)	264 (10.38)	17.0 (38.0)
	3/4	180 (7.09)	15.0 (0.59)	273 (10.75)	18.0 (40.0)
	1	200 (7.87)	18.0 (0.71)	308 (12.12)	23.0 (51.0)
	1-1/2	230 (9.06)	28.0 (1.10	384 (15.12)	40.0 (88.0)
	2	250 (9.84)	35.0 (1.38)	451 (17.75)	54.0 (119.0)

*Specification given are subject to changed without further notice.

MERCOID
Tel: 03-5569 2933 (6 Lines) Fax: 03-5569 2588, 5569 2788
Email: mercoid@mercoid.com.my, valmicro@valmicro.com.my
http://www.mercoid.com.my

LIFT / SWING CHECK VALVE

FORGED CARBON STEEL / STAINLESS STEEL

DONG KANG

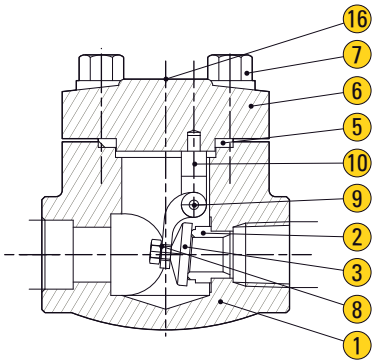

Swing Check

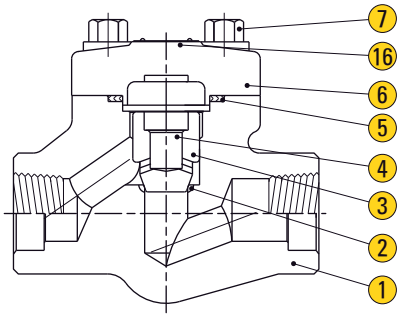

Lift Check

FIG LC/SC-*1-*2-*3

Note : *1 Class | *2 Material | *3 Connection

APPLICATION

Suitable for water, steam, oil, gases and non-abrasive media
(Refer to corrosion resistance table for valve materials selection).

SPECIFICATION

Face To Face Dimension	ASME B16.10
Preasure Rating	Class 600, 800, 1500 and 2500
End To End Dimension	ASME B16.10
Flange End Dimension	ASME B16.5
BW End Dimension	ASME B16.25

CLASS 600 / 800

Unit : mm (inch)

Port	Valve Size	End to End	Center to Top	Dia. of Port Openings	Approx. Wt Kg (Lb)
Reduced	1/2	76 (2.99)	48 (1.89)	9.5 (0.37)	1.0 (2.2)
	3/4	86 (3.39)	54 (2.13)	12.7 (0.50)	1.3 (2.9)
	1	102 (4.02)	63 (2.48)	17.5 (0.69)	2.3 (5.1)
	1-1/4	152 (5.98)	81 (3.19)	22.5 (0.89)	5.0 (11.0)
	1-1/2	152 (5.98)	81 (3.19)	29.5 (1.16)	5.0 (11.0)
	2	172 (6.77)	105 (4.13)	35.0 (1.38)	7.0 (15.4)
Full	1/2	86 (3.39)	54 (2.13)	12.7 (0.50)	1.3 (2.9)
	3/4	102 (4.02)	63 (2.48)	17.5 (0.69)	2.3 (5.1)
	1	152 (5.98)	81 (3.19)	23.0 (0.91)	5.0 (11.0)
	1-1/4	172 (6.77)	105 (4.13)	29.5 (1.16)	7.0 (15.4)
	1-1/2	172 (6.77)	105 (4.13)	35.0 (1.38)	6.8 (15.0)
	2	218 (8.58)	147 (5.79)	45.5 (1.79)	10.6 (23.4)

CLASS 1500

Unit : mm (inch)

Port	Valve Size	End to End	Center to Top	Dia. of Port Openings	Approx. Wt Kg (Lb)
Reduced	1/2	86 (3.39)	54 (2.13)	9.5 (0.37)	1.3 (2.9)
	3/4	102 (4.02)	63 (2.48)	12.7 (0.50)	2.3 (5.1)
	1	152 (5.98)	81 (3.19)	17.5 (0.69)	5.0 (11.0)
	1-1/4	172 (6.77)	105 (4.13)	22.5 (0.89)	7.0 (15.4)
	1-1/2	172 (6.77)	105 (4.13)	29.5 (1.16)	7.0 (15.4)
	2	210 (8.27)	128 (5.04)	35.0 (1.38)	9.1 (20.1)

CLASS 2500

Unit : mm (inch)

Port	Valve Size	End to End	Center to Top	Dia. of Port Openings	Approx. Wt Kg (Lb)
Full	1/2	110 (4.33)	86 (3.39)	10.0 (0.39)	3.0 (7.0)
	3/4	127 (5.00)	101 (3.98)	13.0 (0.51)	4.0 (9.0)
	1	155 (6.10)	121 (4.76)	18.0 (0.71)	8.0 (18.0)
	1-1/4	210 (8.27)	157 (6.18)	23.0 (0.91)	14.0 (31.0)
	1-1/2	210 (8.27)	157 (6.18)	26.0 (1.02)	14.0 (31.0)
	2	229 (9.02)	190 (7.48)	35.0 (1.38)	20 (44.0)

*Specification given are subject to changed without further notice.

Y-CHECK VALVE

FORGED CARBON STEEL / STAINLESS STEEL

DONG KANG

MERCOID
Tel: 03-5569 2933 (6 Lines) Fax: 03-5569 2588, 5569 2788
Email: mercoid@mercoid.com.my, valmicro@valmicro.com.my
http://www.mercoid.com.my

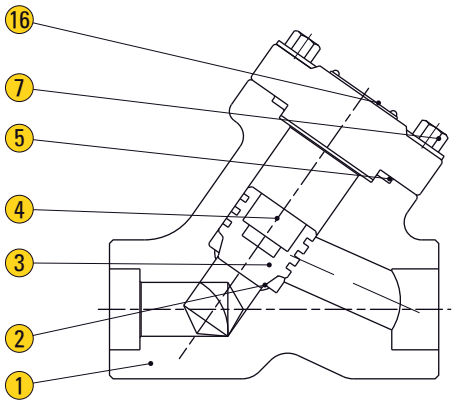

FIG GD-800YC

APPLICATION

Suitable for water, steam, oil, gases and non-abrasive media
(Refer to corrosion resistance table for valve materials selection).

SPECIFICATION

Face To Face Dimension	ASME B16.10
Preasure Rating	Class 600 and 800
End To End Dimension	ASME B16.10
Flange End Dimension	ASME B16.5
BW End Dimension	ASME B16.25

CLASS 600 / 800

Unit : mm (inch)

Port	Valve Size	End to End	Center to Top	Dia. of Port Openings	Approx. Wt Kg (Lb)
Reduced	1/2	84 (3.31)	73 (2.87)	9.5 (0.37)	1.2 (3)
	3/4	95 (3.74)	85 (3.35)	12.7 (0.50)	1.6 (4)
	1	106 (4.17)	88 (3.47)	17.5 (0.69)	2.5 (6)
	1-1/4	137 (5.39)	121 (4.76)	22.5 (0.89)	5.5 (12)
	1-1/2	137 (5.39)	121 (4.76)	29.5 (1.16)	5.4 (12.0)
	2	172 (6.77)	174 (6.85)	35.0 (1.38)	7.8 (17)
Full	1/2	95 (3.74)	85 (3.35)	12.7 (0.50)	1.3 (3)
	3/4	106 (4.17)	88 (3.47)	17.5 (0.69)	2.3 (51)
	1	137 (5.39)	121 (4.76)	23.0 (0.91)	5.0 (11)
	1-1/4	172 (6.77)	174 (6.85)	29.5 (1.16)	7.0 (15)
	1-1/2	172 (6.77)	174 (6.85)	35.0 (1.38)	6.8 (15.0)
	2	200 (7.87)	208 (8.19)	45.5 (1.79)	10.6 (23)

*Specification given are subject to changed without further notice.

LIFT / Y-CHECK VALVE

MATERIAL

Parts		ASTM Designation												
		A105N	A350		A182					A182				
			LF2	LF3	F304/L	F316/L	F321	F347	F51	F5	F9	F11	F22	F91
1	Body	A105N	LF2	LF3	F304/L	F316/L	F321	F347	F51	F5	F9	F11	F22	F91
2	Seat	Integral Hardfaced Stellite 6												
3	Disc	A276-410		A276-316+STL			A276 -321 +STL	A276 -347 +STL	UNS S31803 +STL	A276-410				
4	Spring	A276-316*					Inconel X-750*			A276-316*				
5	Gasket	304 Spiral Wound Graphite				316 SWG	321 SWG	347 SWG	Duplex SWG	304 Spiral Wound Graphite				
6	Cover	A105N	LF2	LF3	F304/L	F316/L	F321	F347	F51	F5	F9	F11	F22	F91
7	Cover Bolt	A193-B7	A320-L7		A193-B8					A193-B16				
16	Name Plate	Aluminium			304 Stainless Steel					Aluminium				

STL: Stellite 6 faced
SWG : Spiral Wound Graphite
A182-F304/L : Dual Certificate Material for A182-F304 & A182-F304L
A182-F316/L : Dual Certificate Material for A182-F316 & A182-F316L
DUPLEX : Duplex Stainless Steel

* Other materials also available on request
** Please mark your offer if require load spring

SWING CHECK VALVE

MATERIAL

Parts		ASTM Designation												
		A105N	A350		A182					A182				
			LF2	LF3	F304/L	F316/L	F321	F347	F51	F5	F9	F11	F22	F91
1	Body	A105N	LF2	LF3	F304/L	F316/L	F321	F347	F51	F5	F9	F11	F22	F91
2	Seat Ring	A276-410		A276-316+STL			A276 -321 +STL	A276 -347 +STL	UNS S31803 +STL	A276-410+STL				
3	Disc	A276-410		A276-316+STL			A276 -321 +STL	A276 -347 +STL	UNS S31803 +STL	A276-410				
4	Hinge	A351-CF8M												
5	Gasket	304 Spiral Wound Graphite				316 SWG	321 SWG	347 SWG	Duplex SWG	304 Spiral Wound Graphite				
6	Cover	A105N	LF2	LF3	F304/L	F316/L	F321	F347	F51	F5	F9	F11	F22	F91
7	Cover Bolt	A193-B7	A320-L7		A193-B8					A193-B16				
8	Retaining Washer	316 Stainless Steel												
9	Support Pin	316 Stainless Steel												
10	Support	316 Stainless Steel												
16	Name Plate	Aluminium			304 Stainless Steel					Aluminium				

STL: Stellite 6 faced
SWG : Spiral Wound Graphite
A182-F304/L : Dual Certificate Material for A182-F304 & A182-F304L
A182-F316/L : Dual Certificate Material for A182-F316 & A182-F316L
DUPLEX : Duplex Stainless Steel

* Other materials also available on request

*Specification given are subject to changed without further notice.

WAFER / LUG DUAL PLATE CHECK VALVE

CAST IRON / CARBON STEEL / STAINLESS STEEL

MERCOID
Tel: 03-5569 2933 (6 Lines) Fax: 03-5569 2588, 5569 2788
Email: mercoid@mercoid.com.my, valmicro@valmicro.com.my
http://www.mercoid.com.my

HAN KOOK VALVE
MADE IN KOREA

FIG C1000

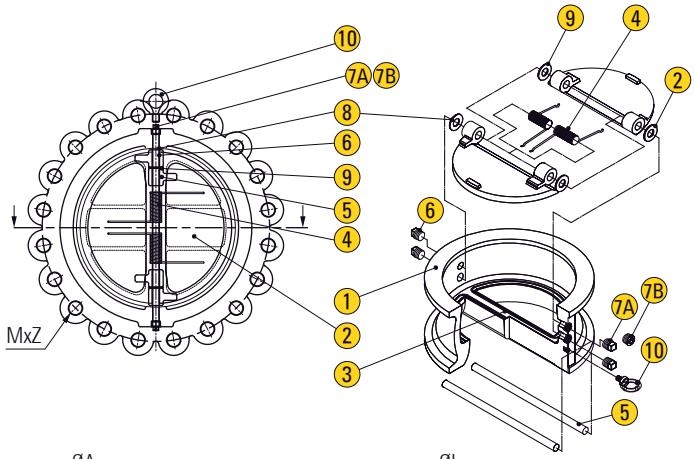

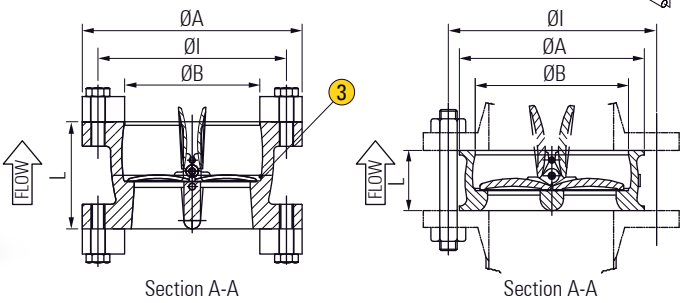

FEATURES

Small and light quick reaction vertical and horizontal bubble tight
Low pressure drop
No slamming, plates start closing against the flow before the stops
Seat : NBR / EPDM / Viton / Metal

PRESSURE RATING

150# / 300# / 600# / 900# / 1500# / 2500#
PN6/PN10/16/PN25/40/PN50/PN110/PN150/PN260/PN420
5K/10K/16K/20K/30K/40K/63K

SPECIFICATION

Design According to API 594

- Shell Wall Thickness According to API 594
- Face to Face According to API 594
- Flanged Dimension According to ANSI B16.5
- Pressure -Temperature Rating According to ASME B16.34
- Pressure Test According to API 598

MATERIAL

Parts		Material
1	Body	A126 CLASS B A536 65-45-12 CF8M/CF8/WCB SCS314/SCS13/WCB 1.4408/1.4308/WCB
2	Plate	A126 CLASS B SCS314/SCS13/WCB 1.4408/1.4308/WCB
3	Seat	VITON / EPDM / NBR
4	Spring	SUS316-WPA
5	Hinge Pin	SUS316/SUS304
6	Stop Pin	SUS316/SUS304
7A & 7B	Plug	A105
8	Body Bearing	SS316
9	Plate Bearing	SS316
10	Eye-bolt	A105

DIMENSIONS (mm)

Unit : mm

Class	Size	DN50	DN65	DN80	DN100	DN125	DN150	DN200	DN250	DN300	DN350	DN400	DN450	DN500
		2"	2"-1/2"	3"	4"	5"	6"	8"	10"	12"	14"	16"	18"	20"
150	L	60	67	73	73	87	98	127	146	181	184	191	203	219
	ØA	152	178	191	229	254	279	343	406	483	533	597	635	699
	ØB	60	73	89	114	141	168	219	273	324	356	406	457	508
	ØI	120.6	139.7	152.4	190.5	215.9	241.3	298.5	362.0	431.8	476.3	539.8	577.9	635.0
	MxZ	4x5/8"	4x5/8"	4x5/8"	8x5/8"	8x5/8"	8x5/8"	8x5/8"	12x7/8"	12x7/8"	12x1"	12x2"	16x1-1/8"-UN	20x1-1/8"-UN
300	L	60	67	73	73	87	98	127	146	181	222	232	264	292
	ØA	165	191	210	254	279	318	381	445	521	584	648	711	775
	ØB	60	73	89	114	141	168	219	273	324	356	406	457	508
	ØI	127.0	149.4	168.1	200.2	235.0	269.7	330.2	387.4	450.9	514.4	571.5	628.7	685.8
	MxZ	8x5/8"	8x3/4"	8x3/4"	8x3/4"	8x3/4"	12x3/4"	12x7/8"	16x1"	16x1-1/8"-UN	20x1-1/8"-UN	20x1-1/4"-UN	20x1-1/4"-UN	20x1-1/4"-UN
600	L	60	67	73	79	105	136	165	213	229	273	305	362	368
	ØA	165	191	210	273	330	356	419	508	559	603	686	743	813
	ØB	60	73	89	114	151	168	219	273	324	356	406	457	508
	ØI	127.0	149.4	168.1	215.9	266.7	292.1	349.3	431.8	489.0	527.1	603.3	654.1	723.9
	MxZ	8x5/8"	8x3/4"	8x3/4"	8x7/8"	8x1"	12x1"	12x1/8"-UN	16x1-1/4"-UN	20x1-1/4"-UN	20x1-3/8"-UN	20x1-1/2"-UN	20x1-5/8"-UN	20x1-5/8"-UN

*Specification given are subject to changed without further notice.

MERCOID
Tel: 03-5569 2933 (6 Lines) Fax: 03-5569 2588, 5569 2788
Email: mercoid@mercoid.com.my, valmicro@valmicro.com.my
http://www.mercoid.com.my

WAFER DISCO CHECK VALVE

CAST IRON / CARBON STEEL / STAINLESS STEEL

DOUGLAS ITALIA

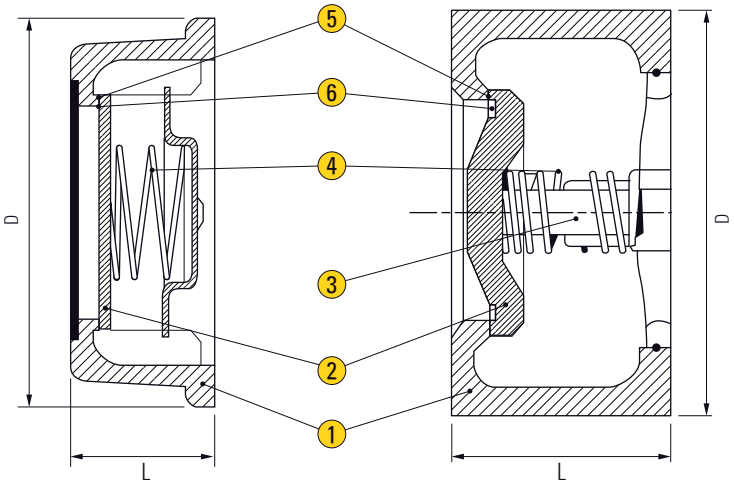

1/2" - 4" 5" - 12"

FIG 377

APPLICATION

Suitable for water, steam, oil, gases and non-abrasive media
(Refer to corrosion resistance table for valve materials selection).

SPECIFICATION

Face To Face Dimension	DIN 3202 Part 3-K4
End Connection	Wafer Type to suit DIN, BS and ANSI Flanges
Preasure Rating	DN 15 to DN 300, 40 Bar maximum
Working Temperature	Up to 400°C

MATERIAL

Parts		Material		
1	Body	WCB	SS304	SS316
2	Disc	WCB	SS304	SS316
3	Holder	SS304	SS304	SS316
4	Spring	SS304	SS304	SS316
5	Seat	SS304	SS304	SS316
6	Seal	SS304	SS304	SS316

PRIME OUT-FORM DIMENSIONS

Unit : mm (inch)

Size	DIN	15	20	25	32	40	50	65	80	100	125	150	200	250	300
	NPS (inch)	1/2	3/4	1	1-1/4	1-1/2	2	2-1/2	3	4	5	6	8	10	12
PN40/300LB	L	16	19	22	28	32	40	46	50	60	90	106	140	200	250
	D	50	60	70	81	91	106	126	150	170	188	224	292	330	378

*Specification given are subject to changed without further notice.

SWING CHECK VALVE
SCREW END
STAINLESS STEEL

MERCOID
Tel: 03-5569 2933 (6 Lines) Fax: 03-5569 2588, 5569 2788
Email: mercoid@mercoid.com.my, valmicro@valmicro.com.my
http://www.mercoid.com.my

MARVIN CONTROLS, INC.

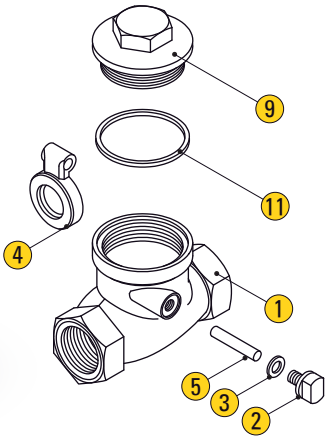

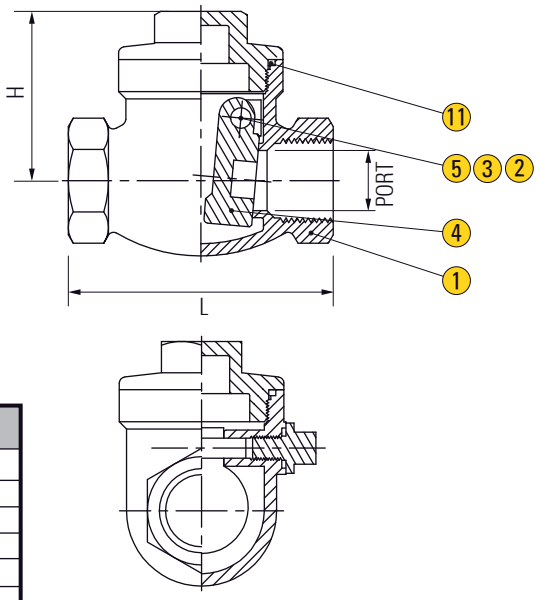

MATERIAL

	Parts	Material
1	Body	1.4408 / EN1503-1
2	Plug	SS316
3	Plug seal	PTFE.
4	Disc	ASTM A351Gr.CF8M
5	Hanger Pin	SS316
9	End Cap	1.4408 / EN1503-1
11	Body Seal	PTFE.

DIMENSIONS

Unit : mm

Size	DN8	DN10	DN15	DN20	DN25	DN32	DN40	DN50	DN65	DN80
	1/4"	3/8"	1/2"	3/4"	1"	1-1/4"	1-1/2"	2"	2-1/2"	3"
PORT	11.0	15.0	15.0	20.0	25.0	32.0	40.0	50.0	65.0	80.0
L	65.0	65.0	65.0	80.0	90.0	105.0	120.0	140.0	180.0	200.0
H	42.0	42.0	42.0	51.0	60.0	67.0	75.0	81.0	93.0	104.0

APPLICATION
Suitable for general chemical and industrial application

SPECIFICATION

End connection	Threaded end
Operating pressure	0.15kgf/cm²
Working pressure	16 Bar (CWP)
Working Temperature	-20 ~ 180ºC

THREE PIECE DISCO CHECK VALVE
SCREW END / BUTT WELD
STAINLESS STEEL

MARVIN CONTROLS, INC.

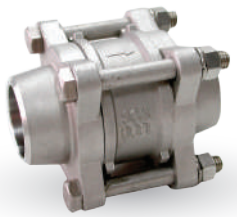

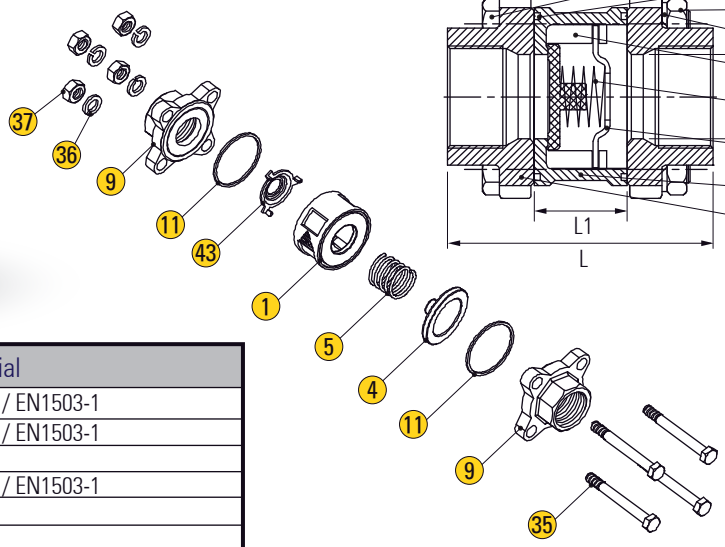

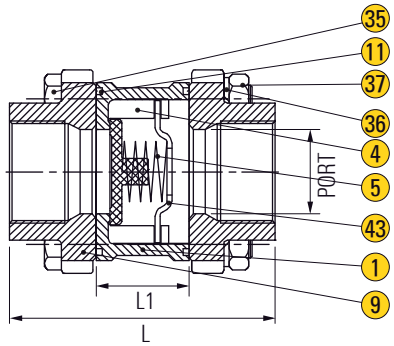

MATERIAL

	Parts	Material
1	Body	1.4408 / EN1503-1
4	Disc	1.4408 / EN1503-1
5	Spring	SS316
9	End Cap	1.4408 / EN1503-1
11	Body Seal	PTFE.
35	Body Bolt	SS304
36	Bolt Washer	SS304
37	Bolt Nut	SS304
43	Holder	SS316

DIMENSIONS

Unit : mm

Size	DN8	DN10	DN15	DN20	DN25	DN32	DN40	DN50	DN65	DN80	DN100
	1/4"	3/8"	1/2"	3/4"	1"	1-1/4"	1-1/2"	2"	2-1/2"	3"	4"
PORT	12.0	12.0	15.0	20.0	25.0	32.0	40.0	50.0	65.0	80.0	100.0
L	53.0	53.0	67.0	69.0	79.0	92.0	101.0	115.0	145.0	154.0	180.0
L1	14.0	14.0	18.0	22.0	27.5	32.0	37.0	47.0	47.0	55.0	70.0

*Specification given are subject to changed without further notice.

APPLICATION
Suitable for general chemical and industrial application

SPECIFICATION

End connection	Threaded end
Working pressure	40 Bar (CWP)
Working Temperature	-20 ~ 180ºC

MERCOID
Tel: 03-5569 2933 (6 Lines) Fax: 03-5569 2588, 5569 2788
Email: mercoid@mercoid.com.my, valmicro@valmicro.com.my
http://www.mercoid.com.my

Y TYPE SPRING CHECK VALVE

SCREW END

STAINLESS STEEL

MARVIN CONTROLS, INC.

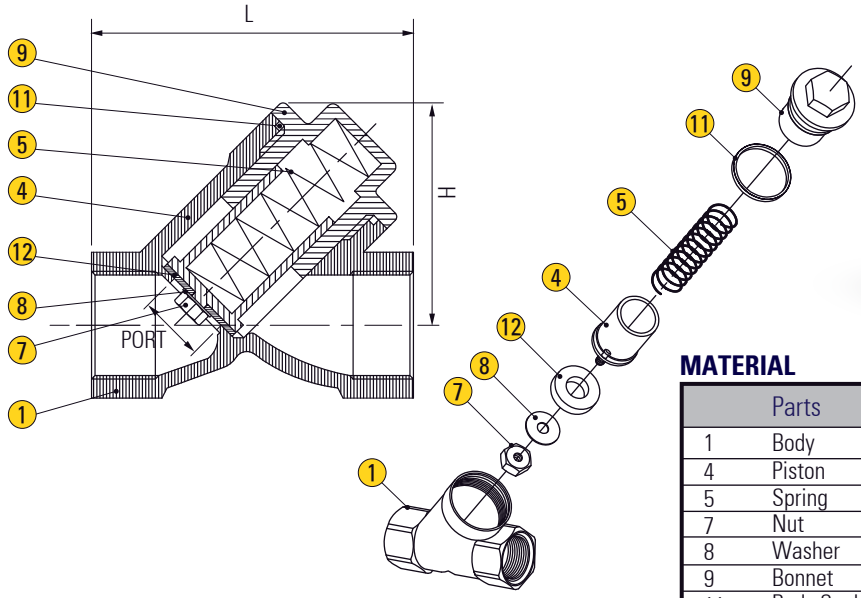

MATERIAL

	Parts	Material
1	Body	1.4408 / EN1503-1
4	Piston	CF8M / EN1503-2
5	Spring	SS316
7	Nut	SS316
8	Washer	SS316
9	Bonnet	1.4408 / EN1503-1
11	Body Seal	PTFE.
12	Seat	PTFE.

APPLICATION

Suitable for general chemical and industrial application

SPECIFICATION

End connection	Threaded end
Working pressure	40 Bar (CWP)
Working Temperature	-20 ~ 180ºC
Operating pressure	0.15kgf/cm²

DIMENSIONS

Unit : mm

Size	DN8	DN10	DN15	DN20	DN25	DN32	DN40	DN50
	1/4"	3/8"	1/2"	3/4"	1"	1-1/4"	1-1/2"	2"
PORT	10.0	12.0	15.0	20.0	25.0	32.0	40.0	50.0
L	65.0	65.0	65.0	80.0	90.0	105.0	120.0	140.0
H	43.0	43.0	45.0	52.0	67.0	70.0	78.0	95.0

INLINE SPRING CHECK VALVE

SCREW END

STAINLESS STEEL

MARVIN CONTROLS, INC.

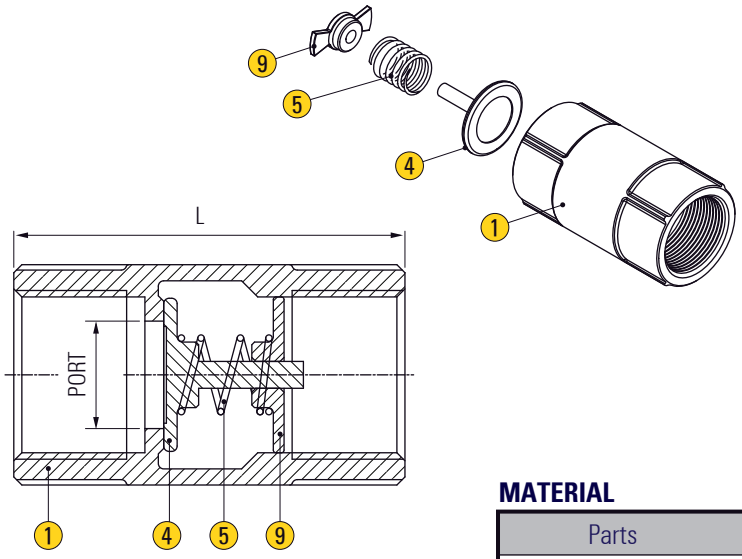

MATERIAL

	Parts	Material
1	Body	1.4408 / EN1503-1
4	Disc	SS316
5	Spring	SS316 / SS304
9	Screw	SS316

APPLICATION

Suitable for general chemical and industrial application

SPECIFICATION

End connection	Threaded end
Working pressure	800 Psi / 40 Bar (CWP)
Temperature range	-4 to 365ºF / -20 ~ 180ºC

Pressure test according to API 598 or EN 12266

DIMENSIONS

Unit : mm

Size	DN15	DN20	DN25	DN32	DN40	DN50
	1/2"	3/4"	1"	1-1/4"	1-1/2"	2"
PORT	11.2	15.0	20.0	25.0	32.0	40.0
L	57.0	63.0	72.8	81.0	91.7	102.4

*Specification given are subject to changed without further notice.

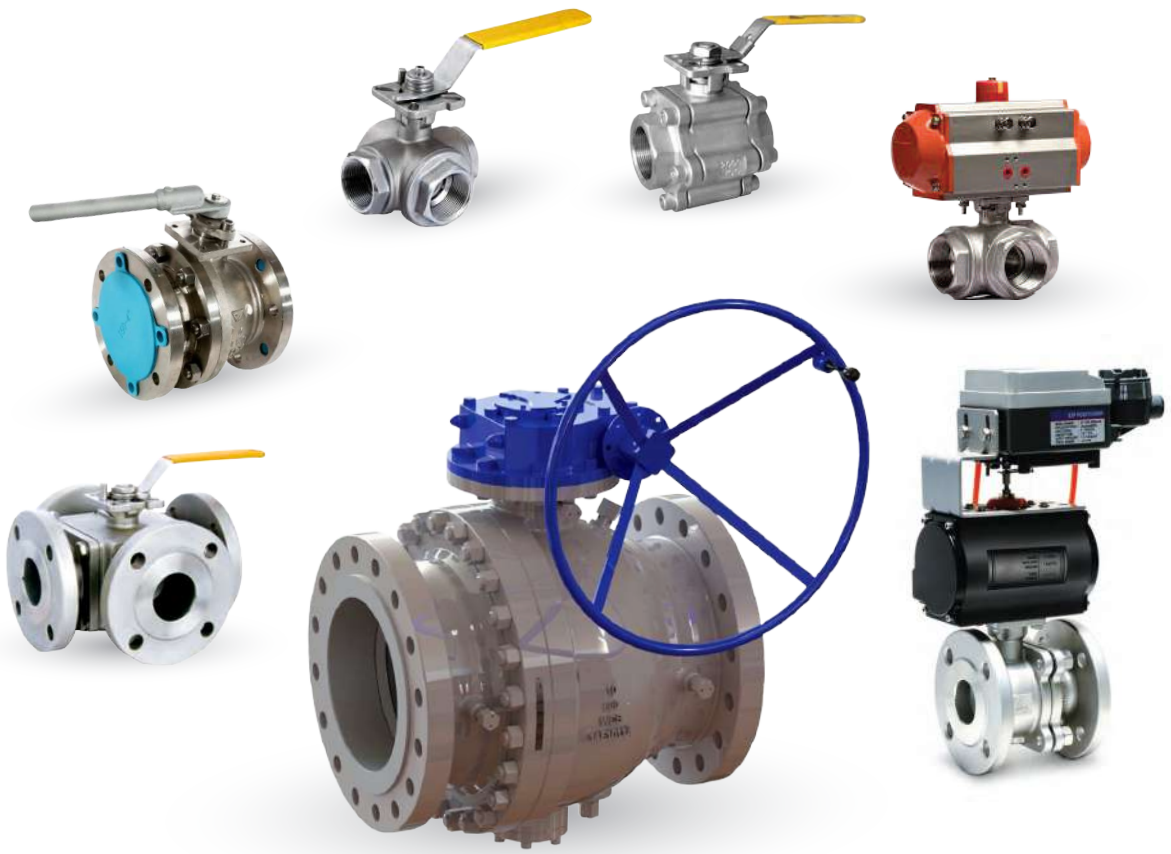

BALL VALVE

A ball valve is a quarter-turn rotational motion valve that uses a ball-shaped disc to stop or start flow. If the valve is opened, the ball rotates to a point where the hole through the ball is in line with the valve body inlet and outlet. If the valve is closed, the ball is rotated so that the hole is perpendicular to the flow openings of the valve body and the flow is stopped.

Types of ball valve
Ball valves are basically available in three versions: full port, venturi port and reduced port. The full-port valve has an internal diameter equal to the inner diameter of the pipe. Venturi and reduced-port versions generally are one pipe size smaller than the line size.

Ball valves are manufactured in different body configurations and the most common are:

- Top entry ball valve allows access to valve internals for maintenance by removal of the valve bonnet-cover. It is not required to removed the valve from the pipe system.
- Split body ball valve consists of a two or three parts, where one part is smaller than the other. The ball is inserted in the larger body part, and the smaller body part is assembled by a bolted connection.

The valve ends are available as butt welding, socket welding, flanged, threaded and others.

MERCOID
Tel: 03-5569 2933 (6 Lines) Fax: 03-5569 2588, 5569 2788
Email: mercoid@mercoid.com.my, valmicro@valmicro.com.my
http://www.mercoid.com.my

BALL VALVE API 6D (FLOATING)

FIRE SAFE & ANTI-STATIC
CAST STEEL / STAINLESS STEEL

HAN KOOK VALVE
MADE IN KOREA

Available modifications for cast steel and stainless steel valves

- Trim changes
- End connection modifications
- Packing and gasket changes
- Operator mounting
- Handweel extentions
- Preassure equlizing
- AS od FD
- Customer specified coatings
- Weld end bore changes
- Oxygen & chlorine cleaning & packing

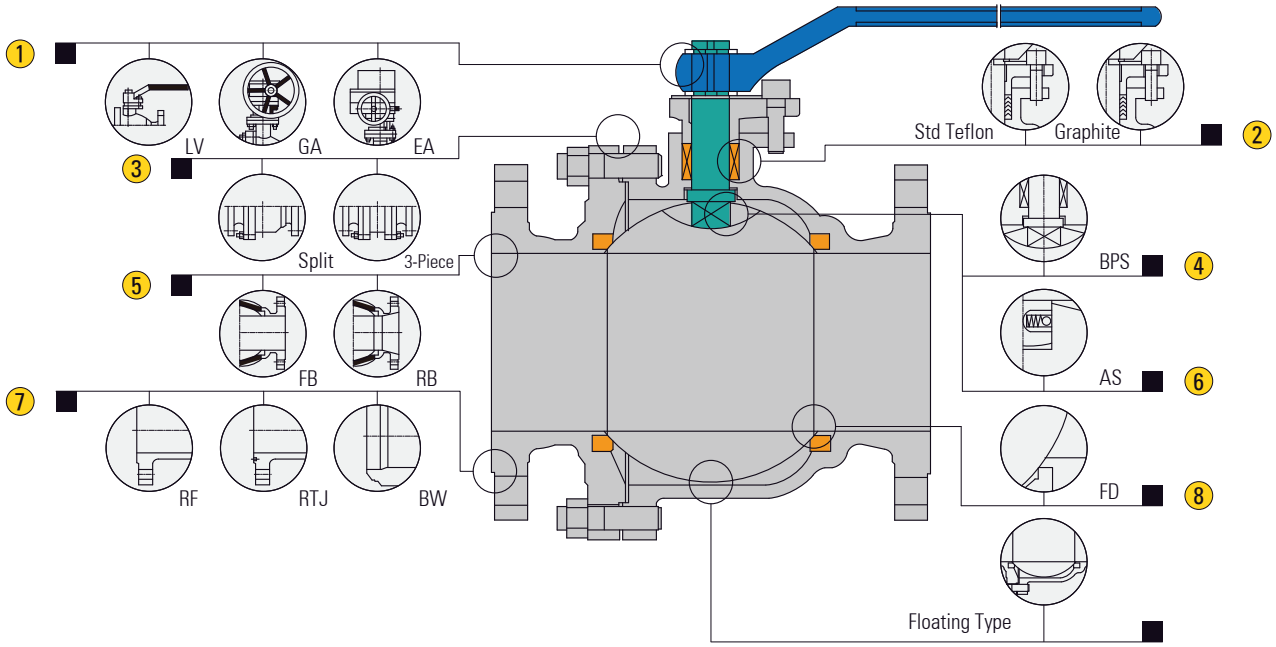

1. Operating

Extended lever for easy operation. Also available with gearing, motor actuators, pneumatic or hydraulic actuators for more difficult services.

2. Packing

STD Packing multiple V-TEFLON packing, combined with live loading, maintains packing compression under high cycle and severe service applications. Graphite packing use situation for high-temperature.

3. Body & Bonnet

Split or 3-piece, split body & bonnet for 12" & smaller. Disassembles easy for repair or replacement of internal components.

4. BPS

Blow-out proof stem. A pressure-safe stem shoulder design that protects against failure under excess pressure.

5. Bore

Full bore or reduced bore. Full bore design provides exceptional flow control.

6. AS

Anti static. A metallic contact is always granted between ball and stem/body to discharge eventual statics build-up during service.

7. End Connections

A choice of flange, RTJ flanged or butt welding end for piping flexibility.

8. FD

Fire durable. Design to API 607 or BS 6755 to grant their operation suitability in case of fire. Second metal-to-metal seal acts as backup if primary seal is destroyed by fire. Valves ordered for compliance with API 607 will be provided with graphite packing and gaskets.

*Specification given are subject to changed without further notice.

BALL VALVE API 6D (FLOATING)

FIRE SAFE & ANTI-STATIC
CAST STEEL / STAINLESS STEEL

MERCOID
Tel: 03-5569 2933 (6 Lines) Fax: 03-5569 2588, 5569 2788
Email: mercoid@mercoid.com.my, valmicro@valmicro.com.my
http://www.mercoid.com.my

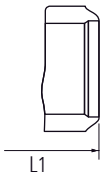

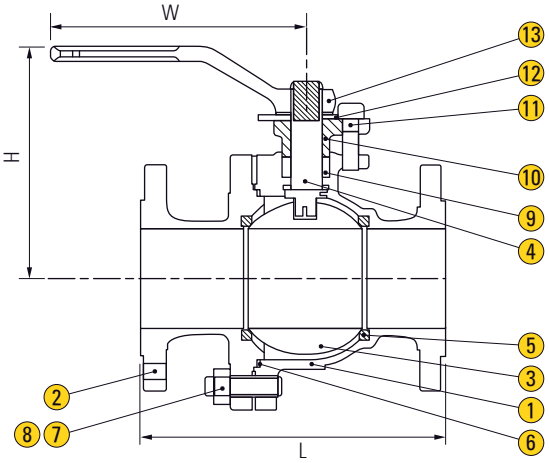

APPLICATION

Suitable for water, steam, oil, gases and non-abrasive media
(Refer to corrosion resistance table for valve materials selection).

SPECIFICATION

Steel Ball Valves	API 608 / API 6D
Steel Ball Valves	ISO 14313
Fire Durable	API 607
Anti Static	API 608
Steel Valves	ASME B16.43
Face to Face	ASME B16.10
End Flanges	ASME B16.25
Inspection and Test	API 598 / API 6D

MATERIAL

Parts		ASTM Specification		
		Carbon Steel	Stainless Steel	Low Temperature Service
1	Body	A216-WCB	A351-CF8M	A352-LCB
2	Bonnet	A216-WCB	A351-CF8M	A352-LCB
3	Ball	A182-F304*1	A182-F316	A182-F304*1
4	Stem	A276-304	A276-316	A276-304
5	Seat Ring	R.PTFE		
6	Bonnet Gasket	Graphite+304*1	PTFE	Graphite+304*1
7	Bonnet Stud	A193-B7	A193-B8	A320-L7
8	Bonnet Stud Nut	A194-2H	A194-8	A194-4
9	Packing	PTFE		
10	Gland Flange	A216-WCB	A351-CF8M	A352-LCB
11	Gland Bolt	A193-B7	A193-B8	A193-B7
12	Stop Plate	Carbon Steel	Carbon Steel+Zn	Carbon Steel
13	Handle	Carbon Steel		

*Note : (1) A 105+ENP optional, (2) Spiral wound construction

CLASS 150 - 300 - 600

Unit : mm

Class	Size (mm)	15	20	25	40	50	65	80	100	150	200	250	300
150	L (RF)	108	117	127	165	178	190	203	229	394	457	533	610
	L1 (BW)	140	152	165	190	216	241	283	305	457	521	559	635
	H	55	55	70	90	105	155	185	205	255	280	345	420
	W	130	130	160	200	350	400	500	500	600	800	800	800
	Weight (Kg)	1.8	2.8	3.7	6.2	8.5	14	21	35	98	170	225	295
300	L (RF)	140	152	165	190	216	241	283	305	403	502	568	648
	L1 (BW)	140	152	165	190	216	241	283	305	457	521	559	635
	H	55	55	70	90	105	153	187	206	255	280	345	420
	W	130	130	160	200	350	400	500	500	600	800	800	800
	Weight (Kg)	1.8	2	3.2	5.5	8.7	15	18	36	85	152	182	232
600	L (RF)	165	190	216	241	292	330	356	432	559	-	-	-
	L1 (BW)	-	-	-	-	295	333	359	435	562	-	-	-
	H	61.5	61.5	78	101	120	174	212	234	289	-	-	-
	W	130	160	200	350	400	500	600	600	800	-	-	-
	Weight (Kg)	2.6	3.1	4.8	8	13	22	27	53	120	-	-	-

*Specification given are subject to changed without further notice.

MERCOID
Tel: 03-5569 2933 (6 Lines) Fax: 03-5569 2588, 5569 2788
Email: mercoid@mercoid.com.my, valmicro@valmicro.com.my
http://www.mercoid.com.my

BALL VALVE API 6D (TRUNNION)

FIRE SAFE & ANTI-STATIC
CAST STEEL / STAINLESS STEEL

HAN KOOK VALVE
MADE IN KOREA

Available modifications for cast steel and stainless steel valves

- Trim changes
- End connection modifications
- Packing and gasket changes
- Operator mounting
- Handweel extentions
- Preassure equlizing
- AS od FD
- Customer specified coatings
- Weld end bore changes
- Oxygen & chlorine cleaning & packing

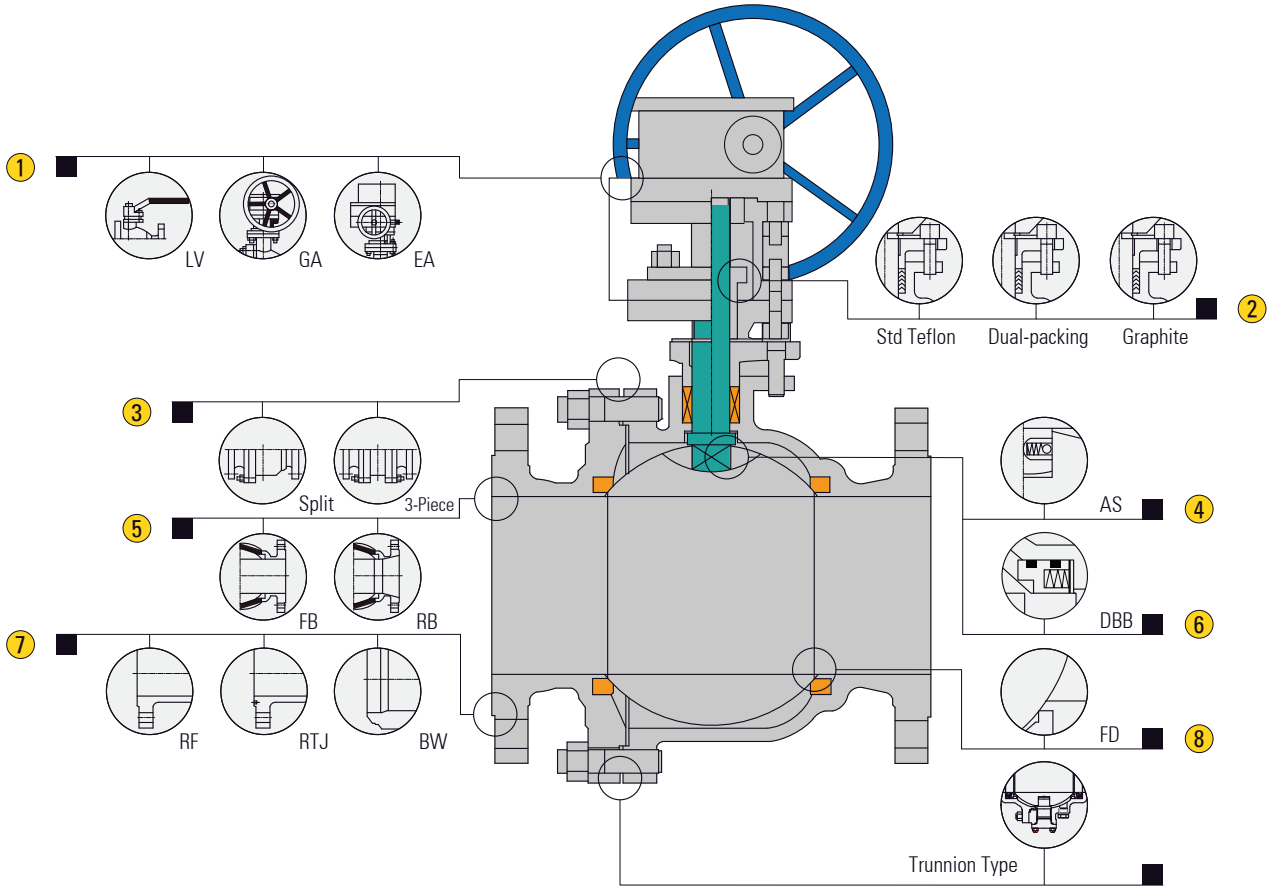

1. Operating

Extended lever for easy operation. Also available with gearing, motor actuators, pneumatic or hydraulic actuators for more difficult services.

2. Packing

STD Packing multiple V-TEFLON packing, combined with live loading, maintains packing compression under high cycle and severe service applications. Graphite packing use situation for high-temperature.

3. Body & Bonnet

Split or 3-piece, split body & bonnet for 12" & smaller. Disassembles easy for repair or replacement of internal components.

4. AS

Anti static. A metallic contact is always granted between ball and stem/body to discharge eventual statics build-up during service.

5. Bore

Full bore or reduced bore. Full bore design provides exceptional flow control.

6. DBB

Double block & bleed. The body cavity is isolated when the ball is in either fully closed or fully opened position, the medium entrapped in it can easily be bled to avoid over pressure.

7. End Connections

A choice of flange, RTJ flanged or butt welding end for piping flexibility.

8. FD

Fire durable. Design to API 607 or BS 6755 to grant their operation suitability in case of fire. Second metal-to-metal seal acts as backup if primary seal is destroyed by fire. Valves ordered for compliance with API 607 will be provided with graphite packing and gaskets.

*Specification given are subject to changed without further notice.

BALL VALVE API 6D (TRUNNION)

FIRE SAFE & ANTI-STATIC
CAST STEEL / STAINLESS STEEL

MERCOID
Tel: 03-5569 2933 (6 Lines) Fax: 03-5569 2588, 5569 2788
Email: mercoid@mercoid.com.my, valmicro@valmicro.com.my
http://www.mercoid.com.my

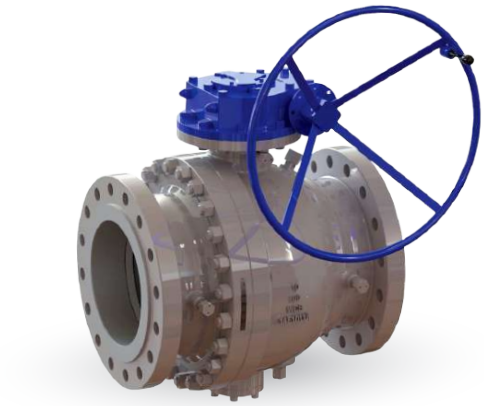

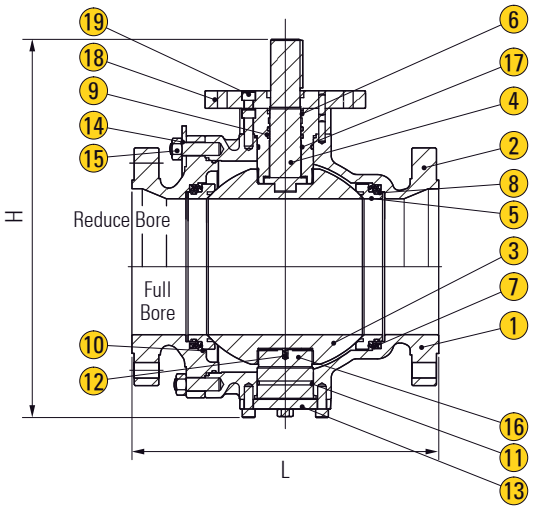

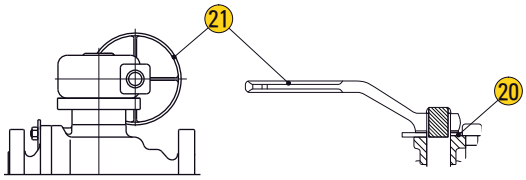

Valve with gear Valve with lever

L1

SPECIFICATION

Steel Ball Valves	API 608 / API 6D
Steel Ball Valves	ISO 14313
Fire Durable	API 607
Anti Static	API 608
Steel Valves	ASME B16.43
Face to Face	ASME B16.10
End Flanges	ASME B16.5
Butt Welding Ends	ASME B16.25
Inspection and Test	API 598 / API 6D

APPLICATION

Suitable for water, steam, oil, gases and non-abrasive media
(Refer to corrosion resistance table for valve materials selection).

MATERIAL

Parts	ASTM Specification		
	Carbon Steel	Stainless Steel	Low Temperature Service
1 Body	A216-WCB	A351-CF8M	A352-LCB
2 Bonnet	A216-WCB	A351-CF8M	A352-LCB
3 Ball	A182-F304*1	A182-F316	A182-F304*1
4 Stem	A276-304	A276-316	A276-304
5 Seat	A105+ENP	A182-F316	A350-LF2+ENP
6 Stem Insert	Class Filled PTFE		
7 Seat Spring	A313-304	Inconel X-750	A313-304
8 Seat O-ring	NBR	Viton	Viton
9 Stem O-ring	NBR	Viton	Viton
10 Bonnet Gasket	Graphite+304*2	Graphite+316*2	Graphite+304*2
11 Bonnet O-ring	NBR	Viton	Viton
12 Antistatic Spring	A313-304	A313-316	A313-304
13 Grounding Plunger	A216-WCB	A182-F316	A182-F304
14 Bonnet Stud	A193-B7	A193-B8	A320-L7
15 Bonnet Stud Nut	A194-2H	A194-8	A194-4
16 Trunnion	A276-304	A276-316	A276-304
17 Trunnion Bearing	304+PTFE	316+PTFE	A304+PTFE
18 Gland Flange	A216-WCB	A351-CF8M	A352-LCB
19 Gland Bolt	A193-B7	A193-B8	A193-B7
20 Stop Plate	Carbon Steel	Carbon Steel+Zn	Carbon Steel
21 Handle	Carbon Steel		

*Note : (1) A 105+ENP optional, (2) Spiral wound construction

*Specification given are subject to changed without further notice.

CLASS 150

Unit : mm

Size (mm)	50	65	80	100	150	200	250	300	350	400	450	500	600	650	700	750	800	900
L (RF)	178	190	203	229	394	457	533	610	686	762	864	914	1067	1143	1245	1295	1372	1524
L1 (BW)	216	241	283	305	457	521	559	635	762	838	914	991	1143	1245	1346	1397	1524	1727
H	177	190	210	235	530	625	650	780	790	920	970	1100	1150	1290	1400	1630	1840	2050
W	350	400	500	500	600	600	600	600	800	800	800	800	800	800	800	800	800	800
Weight (Kg)	13.5	15.5	24.5	32.5	76	132	147	182	241	370	495	726	1125	1250	1640	1930	2390	2760

CLASS 300

Unit : mm

Size (mm)	50	65	80	100	150	200	250	300	350	400	450	500	600	650	700	750	800	900
L (RF)	216	241	283	305	403	502	568	648	762	838	914	991	1143	1245	1346	1397	1524	-
L1 (BW)	216	241	283	305	403	521	559	635	762	838	914	991	1143	1245	1346	1397	1524	-
H	177	190	210	235	530	625	650	780	790	920	970	1100	1150	1290	1400	1630	1800	-
W	350	400	500	500	600	600	600	600	800	800	800	800	800	800	800	800	800	-
Weight (Kg)	14	16	25	34	82	145	155	185	238	375	516	782	1280	1375	1825	2180	2260	-

CLASS 600

Unit : mm

Size (mm)	50	65	80	100	150	200	250	300	350	400	450	500	600	650	700
L (RF) / L1 (BW)	292	330	356	432	559	660	787	838	889	991	1092	1194	1397	1448	1549
L2 (RTJ)	295	333	359	435	562	664	791	841	892	994	1095	1200	1407	1461	1562
H	180	193	215	241	540	635	665	790	810	925	985	1130	1185	1335	1450
W	350	400	500	500	600	600	600	600	800	800	800	800	800	800	800
Weight (Kg)	19	25	42	51	82	200	395	610	805	1010	1350	1656	2775	3125	3790

CLASS 900

Unit : mm

Size (mm)	50	65	80	100	150	200	250	300	350	400	450	500	600
L (RF) / L1 (BW)	368	419	381	457	610	737	838	965	1029	1130	1219	1321	1549
L2 (RTJ)	371	422	384	460	613	740	841	968	1038	1140	1232	1334	1568
H	219	235	260	390	655	770	805	965	980	1145	1195	1360	1425
W	500	500	500	600	600	600	600	800	800	800	800	800	800
Weight (Kg)	23	31	51	61	102	240	480	735	965	1215	1625	1995	3335

CLASS 1500

Unit : mm

Size (mm)	50	65	80	100	150	200	250	300	350	400
L (RF) / L1 (BW)	368	419	470	546	705	832	991	1130	1257	1384
L2 (RTJ)	371	422	473	549	711	841	1000	1146	1276	1407
H	285	306	338	506	852	1000	1045	1255	1270	1485
W	500	500	600	600	600	800	800	800	800	800
Weight (Kg)	33	44	73	87	145	345	685	1050	1385	1735

CLASS 2500

Unit : mm

Size (mm)	50	65	80	100	150	200	250	300	350	400
L (RF) / L1 (BW)	451	508	578	673	914	1022	1270	1422	-	-
L2 (RTJ)	454	540	584	683	927	1038	1292	1445	-	-
H	304	327	362	540	911	1070	1120	1345	-	-
W	500	600	600	600	800	800	800	800	-	-
Weight (Kg)	41	55	91	110	182	430	855	1315	-	-

*Specification given are subject to changed without further notice.

1-PC REDUCED PORT BALL VALVE SCREW END

CARBON STEEL / STAINLESS STEEL

MERCOID
Tel: 03-5569 2933 (6 Lines)
Fax: 03-5569 2588, 5569 2788
Email: mercoid@mercoid.com.my,
valmicro@valmicro.com.my
http://www.mercoid.com.my

MARVIN CONTROLS, INC.

2-PC FULL PORT BALL VALVE SCREW END

CARBON STEEL / STAINLESS STEEL

SERIES 10

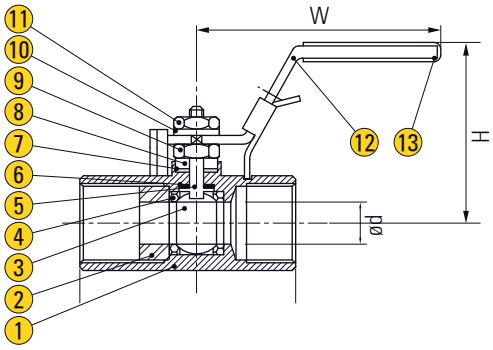

APPLICATION

Suitable for water, steam, oil, gases and non-abrasive media
(Refer to corrosion resistance table for valve materials selection).

SPECIFICATION

- Pipe thread in accordance with ANSI B2.1, BS21 1973, DIN259 / 2999, ISO228
- Blow-out proof stem / reduce bore
- Investment casting body and inscrewed
- 2000 PSI W.O.G
- Mounting pad

Option: Locking device
Drilling and tapped mounting pad

MATERIAL

Parts	Material	
1 Body	ASTM-A216-WCB	ASTM-A351-CF8M
2 Insert	ASTM-A216-WCB	ASTM-A351-CF8M
3 Ball	ASTM-A315-CF8	ASTM-A351-CF8M
4 Seat	R-PTFE	R-PTFE
5 Thrust Washer	PTFE	PTFE
6 Stem	AISI 304	AISI 304
7 Stem Seal	PTFE	PTFE
8 Gland Washer	AISI 304	AISI 304
9 Conical Spring Washer	AISI 304	AISI 304
10 Spring Washer	AISI 304	AISI 304
11 Nut	AISI 304	AISI 304
12 Lever Handle	AISI 304	AISI 304
13 Handle Sleeve	Plastic	Plastic

DIMENSIONS

Unit : mm

Size	d	L	H	W
1/4"-3/8"	9.2	58.5	46.9	109
1/2"	9.2	66	57.9	98
3/4"	12.5	70	60.9	98
1"	15	80	63.8	104.7
1-1/4"	20	95	70.3	101.9
1-1/2"	25	101	72.3	156.1
2"	32	114	78.3	155.1
2-1/2"	38	112	130.5	215
3"	50	134	142.5	215
4"	64	192	173.5	325

*Specification given are subject to changed without further notice.

SERIES 20

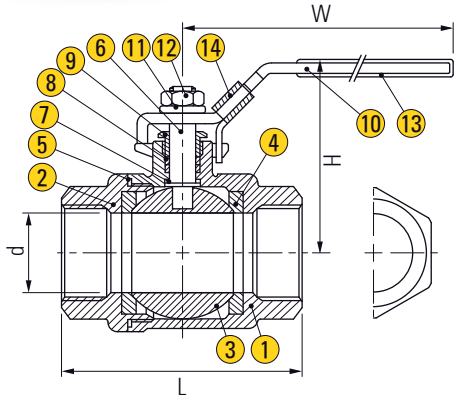

APPLICATION

Suitable for water, steam, oil, gases and non-abrasive media
(Refer to corrosion resistance table for valve materials selection).

SPECIFICATION

- Pipe thread in accordance with ANSI B2.1, BS21 1973, DIN259 / 2999, ISO228
- With mounting pad
- Blow-out proof stem / full port
- Investment casting body and cap
- 1000 PSI (69 Bar) W.O.G
- Lug body

Option: Locking device
Drilling and tapped mounting pad

MATERIAL

Parts	Material	
1 Body	ASTM-A216-WCB	ASTM-A351-CF8M
2 Cap	ASTM-A216-WCB	ASTM-A351-CF8M
3 Ball	ASTM-A315-CF8	ASTM-A351-CF8M
4 Ball Seat	R-PTFE	R-PTFE
5 Joint Gasket	PTFE	PTFE
6 Stem	ASIS 304	ASIS 316
7 Thrust Washer	PTFE	PTFE
8 Stem Packing	PTFE	PTFE
9 Gland Nut	AISI 304	AISI 304
10 Handle	AISI 304	AISI 304
11 Spring Washer	AISI 304	AISI 304
12 Stem Nut	AISI 304	AISI 304
13 Plastic Cover	Plastic	Plastic
14 Lock Device	AISI 304	AISI 304

DIMENSIONS

Unit : mm

Size	d	L	H	W
1/4"	11.6	44.5	51	95
3/8"	12.7	44.5	51	95
1/2"	15	57	53	95
3/4"	20	65	59.5	110
1"	25	76	73	135
1-1/4"	32	87.5	79	135
1-1/2"	38	102	90.5	165
2"	50	123	98.5	165
2-1/2"	65	156	130.5	215
3"	80	184	142.5	215
4"	100	250	173.5	325

3-PC PORT BALL VALVE

SCREW END / BUTT WELD END / SOCKET WELD END

CARBON STEEL / STAINLESS STEEL

MERCOID
Tel: 03-5569 2933 (6 Lines)
Fax: 03-5569 2588, 5569 2788
Email: mercoid@mercoid.com.my,
valmicro@valmicro.com.my
http://www.mercoid.com.my

MARVIN CONTROLS, INC.
Alco Controls® Specialize Process Valve (GERMANY)
EBRO

SERIES 90

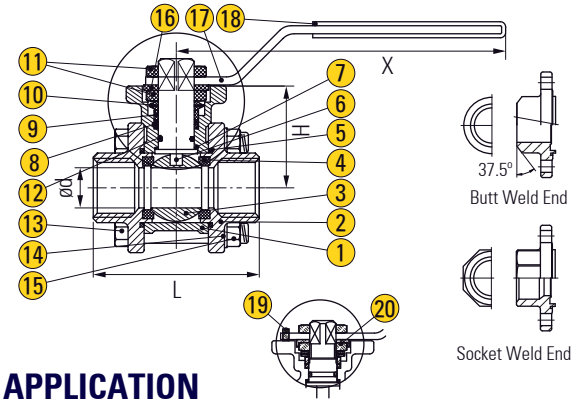

APPLICATION

Suitable for water, steam, oil, gases and non-abrasive media
(Refer to corrosion resistance table for valve materials selection).

SPECIFICATION

- Pipe thread in accordance with ANSI B2.1, BS21 1973, DIN259 / 2999, ISO228
- Lug body
- Blow-out proof stem / full port
- Investment casting body and cap
- 1000 PSI (69 Bar) W.O.G
- Direct mounting pad for ISO standard 5211
- Screw end, butt weil end, socket weld end

Option: Similar design but with C style clip
DIN standard M3 length

MATERIAL

Parts		Material	
1	Body	ASTM-A351-CF8M	ASTM-A216-WCB
2	Cap	ASTM-A351-CF8M	ASTM-A216-WCB
3	Ball	ASTM-A351-CF8M	ASTM-A351-CF8
4	Ball Seat	PTFE	PTFE
5	Joint Gasket	PTFE	PTFE
6	Stem	ASIS 316	AISI 304
7	Thrust Washer	PTFE	PTFE
8	Stem Packing	PTFE	PTFE
9	High Washer	AISI 304	AISI 304
10	Belleville Washer	AISI 304	AISI 304
11	Stem Nut	AISI 304	AISI 304
12	O-Ring	Viton	Viton
13	Bolt	AISI 304	AISI 304
14	Spring Washer	AISI 304	AISI 304
15	Hex Nut	AISI 304	AISI 304
16	Stopper	AISI 304	AISI 304
17	Handle	AISI 304	AISI 304
18	Plastic Cover	Plastic	Plastic
19	Stopper Pin	AISI 304	AISI 304
20	Lock Washer	AISI 304	AISI 304

DIMENSIONS

Unit : mm

Size	Ød	L	H	X
1/4"	11.6	58	36	112
3/8"	12.8	58	36	112
1/2"	15	62	38	112
3/4"	20	77	41.7	138
1"	25	83	44.4	138
1-1/4"	32	94	52.8	205
1-1/2"	38	107	58.5	205
2"	50	120	66	205
2-1/2"	65	157	101.5	330
3"	80	182	112.5	330
4"	100	213.6	127.0	330
5"	120	283	158.5	500
6"	150	342	175	500

*Note : 8"/10"/12" also available on request

*Specification given are subject to changed without further notice.

3-PC FULL PORT HIGH PERFORMANCE BALL VALVE

SCREW END / BUTT WELD END / SOCKET WELD END

CARBON STEEL / STAINLESS STEEL

SERIES 110

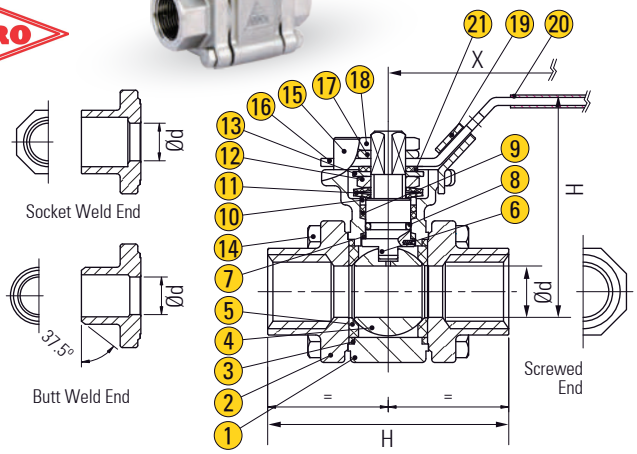

APPLICATION

Suitable for water, steam, oil, gases and non-abrasive media
(Refer to corrosion resistance table for valve materials selection).

SPECIFICATION

- Pipe thread in accordance with ANSI B2.1, BS21 1973, DIN259 / 2999, ISO228
- Blow-out proof stem
- Investment casting body and cap
- 2000 PSI or 3000 PSI W.O.G
- Lug body
- Screwed end, butt weld & socket weld end
- Direct mounting pad ISO 5211

Option: Locking device / Standard port
Similar design but with C style clip
DIN standard M3 length
Fire-safe design

MATERIAL

Parts		Material	
1	Body	ASTM-A351-CF8M	ASTM-A216-WCB
2	End Cap	ASTM-A351-CF8M	ASTM-A216-WCB
3	Joint Gasket	PTFE	PTFE
4	Solid Ball	ASTM-A351-CF8M	ASTM-A351-CFB
5	Ball Seat	PTFE	PTFE
6	Stem	ASIS 316	AISI 304
7	Thrust Washer	PTFE	PTFE
8	O-Ring	Viton	Viton
9	Stem Packing	PTFE	PTFE
10	Stem Ring	AISI 304	AISI 304
11	Belleville Washer	AISI 301	AISI 301
12	Stem Nut	AISI 304	AISI 304
13	Saddle Washer	AISI 304	AISI 304
14	Hex Bolt	AISI 304	AISI 304
15	Stop Pin	AISI 304	AISI 304
16	Handle	AISI 304	AISI 304
17	Spring Washer	AISI 304	AISI 304
18	Handle Nut	AISI 304	AISI 304
19	Locking Device	AISI 304	AISI 304
20	Cover	Plastic	Plastic
21	Square Washer	AISI 304	AISI 304

DIMENSIONS

Unit : mm

Size \ Dim	Ød	L			H	X
		SD	SW	BW		
1/4"	11	65	65	70	58	112
3/8"	12.5	65	65	70	58	112
1/2"	16	75	75	75	62	112
3/4"	20	80	80	80	66	125
1"	25	90	90	100	75	138
1-1/4"	32	110	110	110	80	138
1-1/2"	38	120	120	125	95	170
2"	50	140	140	150	104	170

2-PC FULL PORT BALL VALVE
FLANGE END
CAST IRON / CARBON STEEL / STAINLESS STEEL

MERCOID
Tel: 03-5569 2933 (6 Lines) Fax: 03-5569 2588, 5569 2788
Email: mercoid@mercoid.com.my, valmicro@valmicro.com.my
http://www.mercoid.com.my

VARIMEX Valves® CO. LTD.

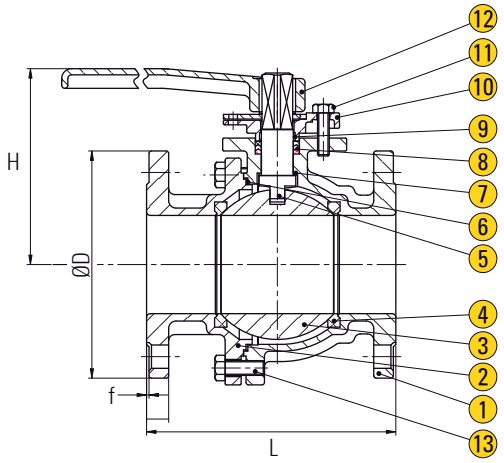

APPLICATION
Suitable for water, steam, oil, gases and non-abrasive media
(Refer to corrosion resistance table for valve materials selection).

SPECIFICATION

ANSI 150
- Flange: ANSI B16.5 Class 150
- Face to face : ANSI B16.10
- Mounting pad for ISO 5211
- Anti-static device, fire safe design
- Blow-out proof stem, lever operated
- Full port

Option: Solid ball / Hollow ball
Wrench handle
Locking device
Gear operated

JIS10K
- Flange: JIS B2239 - JIS10K
- Face to face : JIS B2002
- Mounting pad for ISO 5211
- Anti-static device, fire safe design
- Blow-out proof stem, lever operated
- Full port, solid ball / hollow ball

Option: Solid ball / Hollow ball
Wrench handle
Locking device
Gear operated

PN16, PN40
- Flange: DIN 2633 PN16
  DIN 2633 PN40
- Face to face : DIN 3202 F1/F4/F5
- Mounting pad for ISO 5211
- Anti-static device, fire safe design
- Blow-out proof stem, lever operated
- Full port, solid ball / hollow ball

Option: Solid ball / Hollow ball
Wrench handle
Locking device
Gear operated

MATERIAL

	Parts	Material			
1	Body	FC20	WCB	CF8	CF8M
2	Cap	FC20	WCB	CF8	CF8M
3	Ball	CF8	SCS13	CF8	CF8M
4	Seat	15% GF+PTFE / 25% CF+PTFE / 50% CF+PTFE / Others on request			
5	Stem	SS304	SS304	SS316	SS304
6	Gasket	PTFE			
7	Thrust Washer	PTFE			
8	Packing	PTFE			
9	Stem Packing	PTFE			
10	Gland	SCS13			
11	Gland Bolt	ASTM 194-B8			
12	Handle	FC / WCB / SS304			
13	Bolt	ASTM 194-B8			

DIMENSIONS
Unit : mm (inch)

Size	D				f	L				H	ISO 5211
	ANSI 150	JIS10K	PN16	PN40		ANSI 150	JIS10K	PN16	PN40		
1/2"	89	95	95	95	1.6	108	110	130		85	F04
3/4"	98	100	105	105	1.6	117	120	150		90	F04
1"	108	125	115	115	1.6	127	130	160		100	F04
1-1/4"	117	135	140	140	1.6	140	140	180		105	F05
1-1/2"	127	140	150	150	1.6	165	165	200		110	F07
2"	152	155	165	165	1.6	178	180	230		120	F07
2-1/2"	178	175	185	185	1.6	190	190	290		160	F07
3"	190	185	200	200	1.6	203	200	310		170	F10
4"	229	210	220	235	1.6	229	230	350		185	F10
5"	254	250	250	270	1.6	356	300	400		260	F12
6"	279	280	285	300	1.6	394	340	480		280	F12
8"	343	330	340	375	1.6	457	450	600		340	F12
10"	406	400	405	450	1.6	533	533	730		400	F14
12"	483	445	460	515	1.6	610	610	850		Gear	F14

*Specification given are subject to changed without further notice.

MERCOID
Tel: 03-5569 2933 (6 Lines) Fax: 03-5569 2588, 5569 2788
Email: mercoid@mercoid.com.my, valmicro@valmicro.com.my
http://www.mercoid.com.my

3-PC FULL / RED. PORT HIGH PERFORMANCE BALL VALVE

SCREW END / BUTTWELD END / SOCKET END / FLANGE END

FORGED CARBON STEEL / STAINLESS STEEL

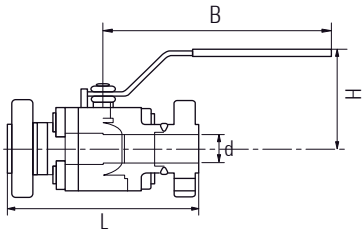

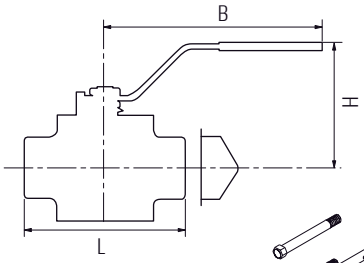

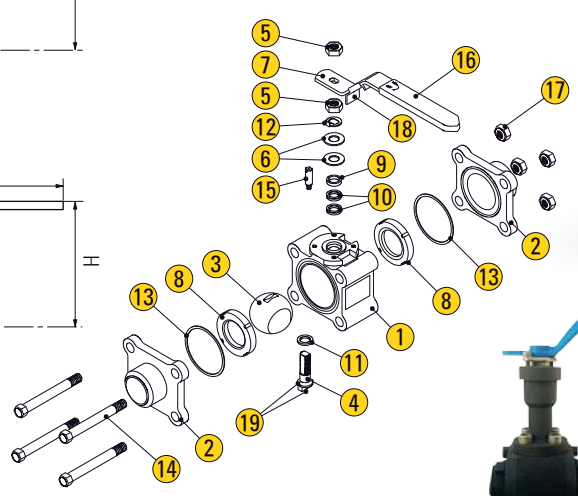

Option : Extended Bonnet

Option : Extended End

APPLICATION

Suitable for water, steam, oil, gases and non-abrasive media
(Refer to corrosion resistance table for valve materials selection).

SPECIFICATION

- 3 Pieces body design
- Blow-Out-Proof stem design
- Forged steel components
- Four point ISO 5211 mounting pad bold circle
- End connection : Threaded, Socket weld, Butt weld, Flange end

Full bore	1/4" - 2' (DN8 - DN50)
Reduce bore	1/2" - 2" (DN15 - DN50)
Body	ASTM A105 / F316
Ball / Stem	CF8M / SS316
Seat	RTFE + (15% Glass fiber filled)
Working Pressure	Class 600, 800, 900, 1500 and 2500
Temperature Range	-4 to 356°F (-20 to 180°C)

MATERIAL

Parts		Material		Parts		Material
1	Body	F316	A105N	11	Stem Seal	RPTFE
2	End Cap	F316 ¤	A105N	12	Lock Saddle	SUS304
3	Ball	SUS316		13	Joint Gasket	PTFE
4	Stem	SUS316		14	Bolt	SUS304 *
5	Stem nut	SUS304		15	Stop Pin	SUS304
6	Belleville Washer	SUS301		16	Handle Sleeve	Vinyl
7	Handle	SUS304		17	Bolt Nut	SUS304 ƒ
8	Seat	RPTFE		18	Locking Device	SUS304
9	Gland	SUS304		19	Anti-Static Device	SUS304
10	V-Shape Packing	MG-1241				

Note : ¤ Socket weld and butt weld uses CF3M material | * For 1/4" to 1-1/2"- 4pcs ; 2" to 2-1/2"- 6pcs | ƒ For 1/4" to 1-1/2"- 4pcs ; 2" to 2-1/2"- 6pcs

DIMENSIONS - THREADED, SOCKET WELD, BUTT WELD

Unit : mm

Class	Size (in)	1/4	3/8	1/2	3/4	1	1-1/4	1-1/2	2
600/ 800	L 1	92	92	92	111	127	140	152	152
	B	108	108	108	146	178	178	200	200
	H	51	51	51	51	81	85	105	105
	d	6	9	13	18	23	28	35	49
900/ 1500	L 1	92	92	92	111	127	140	152	152
	B	108	108	108	146	178	178	200	200
	H	51	51	51	108	81	85	105	105
	d	6	9	13	19	25	32	38	49

DIMENSIONS - FLANGE END

Unit : mm

Class	Size (in)	1/2	3/4	1	1-1/4	1-1/2	2
900/ 1500	L	216	229	256	279	305	368
	B	230	230	350	400	400	400
	H	75	85	85	105	110	130
	d	13	19	25	32	38	49
2500	L	264	273	308	349	400	451
	B	280	280	95	350	110	400
	H	75	85	95	105	38	130
	d	13	19	25	30	11.5	42

*Specification given are subject to changed without further notice.

TWO WAY BALL VALVE
CARBON STEEL / STAINLESS STEEL

MERCOID
Tel: 03-5569 2933 (6 Lines) Fax: 03-5569 2588, 5569 2788
Email: mercoid@mercoid.com.my, valmicro@valmicro.com.my
http://www.mercoid.com.my

DESIGN FEATURE
- Jacket design
- Full bore
- 1/2" - 6" (DN15 - DN150)
- Blow-Out-Proof stem design
- Anti-static device
- ISO 5211 mounting flange
- ANSI B16.5 Class 150 RF, EN1092-1 PN10/16, JIS 2010 10K

Body	ASTM A351 Gr.CF8M (1.4408)
Ball / Stem	CF8M / SS316
Seat	50% PTFE + 50% S.S
Temperature Range	-4 to 356ºF (-20 to 180ºC)

DESIGN FEATURE
- 1 Piece body design
- Wafer type
- Full bore
- 1/2" - 4" (DN15 - DN100)
- Blow-Out-Proof stem design
- Anti-static device
- ISO 5211 direct mounting flange
- Face to face : MFG. Standard
- EN1092-1 PN16 RF

Body	ASTM A351 Gr.CF8M (1.4408)
Ball / Stem	CF8M / SS316
Seat	RTFE (15% Glass fiber filled)
Temperature Range	-4 to 365ºF (-20 to 180ºC)

TRUNNION MOUNTED CASTING / FORGED
CARBON STEEL / STAINLESS STEEL

DESIGN FEATURE
- Full bore
- 2" - 36" (DN400 - DN900)
- API 6FA Fire safe design
- Blow-Out-Proof stem design
- Anti-static device
- ANSI B16.10 Class 150 / 300 / 600
- ANSI B16.5 Class 150 / 300 / 600 RF, ASME B16.47 for 26" & up

Body	ASTM A216 Gr.WCB / CF8M
Ball / Stem	CF8M / SS316
Seat	PTFE / NYLON
Temperature Range	-4 to 356ºF (-20 to 180ºC)

DESIGN FEATURE
- Full bore
- 2" - 36" (DN50 - DN400)
- 3 pieces body design
- API 6FA Fire safe design
- Blow-Out-Proof stem design
- Anti-static device
- ANSI B16.10 Class 150-2500
- ANSI B16.5 Class 150-2500, ASME B16.47 for 26" & up

Body	ASTM A105 / F316
Ball / Stem	F316 / F316
Seat	PTFE / NYLON
Temperature Range	-4 to 365ºF (-20 to 180ºC)

METAL SEATED BALL VALVE
CARBON STEEL / STAINLESS STEEL

DESIGN FEATURE
- Full bore
- 1/2" - 12" (DN15 - DN300)
- Blow-Out-Proof stem design
- Anti-static device
- ANSI B16.10 Class 150 / 300
- ANSI B16.5 Class 150 / 300 RF

Body	ASTM A351 Gr.CF8M
Ball / Stem	CF8M + Hard Cr. / SS316
Seat	SS316 + Stellite #6
Tightness Rate	Δ P : ASME / FCI 70-2 Class IV

DESIGN FEATURE
- Full bore
- 1/2" - 6" (DN15 - DN150)
- Blow-Out-Proof stem design
- Anti-static device
- Handle with locking device
- ISO 5211 mounting flange
- End connection : Threaded, Socket weld, Butt weld end

DESIGN SPECIFICATION : ANSI B16.34 Class 600
- Working pressure (CWP) : 1/2" - 1' 2000 PSI (DN25 PN140)
  1-1/4" - 2' 1500 PSI (DN31 PN110)

Body	ASTM A351 Gr.CF8M (1.4408)
Ball / Stem	CF8M + Hard Cr. / SS316
Seat	SS316 + Stellite #6
Tightness Rate	Δ P : ASME / FCI 70-2 Class IV

*Specification given are subject to changed without further notice.

MERCOID
Tel: 03-5569 2933 (6 Lines) Fax: 03-5569 2588, 5569 2788
Email: mercoid@mercoid.com.my, valmicro@valmicro.com.my
http://www.mercoid.com.my

MULTI WAY BALL VALVE
FLANGE (SIDE ENTRY)
CARBON STEEL / STAINLESS STEEL

DESIGN FEATURE

- Full bore
- 1/2" - 6" (DN15 - DN150)
- Split body, Floating type
- Blow-Out-Proof stem design
- Anti-static device
- ISO 5211 direct mounting for 1/2" - 3"
- ISO 5211 mounting flange for 4" - 6"
- Face to face : MFG. Standard
- ANSI B16.5 Class 150 RF, EN1092-1 PN10/16/25/40 RF, JIS 2010 10K

Body	ASTM A351 Gr.CF8M (1.4408)
Ball / Stem	CF8M / SS316
Seat	RTFE + (15% Glass fiber filled)
Temperature Range	-4 to 356ºF (-20 to 180ºC)

DESIGN FEATURE

- Full bore, Solid ball
- 1/2" - 6" (DN15 - DN150)
- Split body, Floating type
- Blow-Out-Proof stem design
- Anti-static device
- ISO 5211 direct mounting for 1/2" - 3"
- ISO 5211 mounting flange for 4" - 6"
- Face to face : MFG. Standard
- ANSI B16.5 Class 150 RF, EN1092-1 PN10/16/25/40 RF, JIS 2010 10K

Body	ASTM A351 Gr.CF8M (1.4408)
Ball / Stem	CF8M / SS316
Seat	RTFE (15% Glass fiber filled)
Temperature Range	-4 to 365ºF (-20 to 180ºC)

THREE PIECE BALL VALVE
CARBON STEEL / STAINLESS STEEL

DESIGN FEATURE

- Full bore
- 1/2" - 4" (DN15 - DN100)
- Blow-Out-Proof stem design
- End connection : Flange end
- Face to face : EN558-1 F1
- Flange Dim : EN1092-1 PN16/40 RF

Body	ASTM A351 Gr.CF8M (1.4408)
Ball / Stem	CF8M / SS316
Seat	PTFE
Temperature Range	-4 to 356ºF (-20 to 180ºC)

DESIGN FEATURE

- Full bore
- 1/2" - 4" (DN15 - DN100)
- Blow-Out-Proof stem design
- End connection : Extended butt weld

Body	ASTM A351 Gr.CF8M (1.4408)
Ball / Stem	CF8M / SS316
Seat	PTFE
Working Pressure	1/2" - 2" 1000 PSI (PN63) 2-1/2" - 4 " 800 PSI (PN40)
Temperature Range	-4 to 365ºF (-20 to 180ºC)

DESIGN FEATURE

- Full bore
- 1/4" - 2" (DN8 - DN50)
- Blow-Out-Proof stem design
- Anti-static device
- ISO 5211 direct mounting flange
- Handle with locking device
- End connection : Threaded, Socket weld end

Body	ASTM A351 Gr.CF8M (1.4408)
Ball / Stem	CF8M / SS316
Seat	RTFE + (15% Glass fiber filled)
Working Pressure	1/4" - 2" 2000 PSI (PN140)

DESIGN FEATURE

- 3 Pieces body design
- Blow-Out-Proof stem design
- Forged steel components
- Four point ISO 5211 mounting pad bold circle
- End connection : Threaded, Socket weld, Butt weld end

Full bore - 1/4" - 2' (DN8 - DN50)
Reduce bore - 1/2" - 2" (DN15 - DN50)

Body	ASTM A105 / F316
Ball / Stem	CF8M / SS316
Seat	RTFE + (15% Glass fiber filled)
Working Pressure	1500 PSI (PN100)
Temperature Range	-4 to 356ºF (-20 to 180ºC)

*Specification given are subject to changed without further notice.

HIGH PRESSURE BALL VALVE

CARBON STEEL / STAINLESS STEEL

MERCOID
Tel: 03-5569 2933 (6 Lines)
Fax: 03-5569 2588, 5569 2788
Email: mercoid@mercoid.com.my,
valmicro@valmicro.com.my
http://www.mercoid.com.my

MULTI WAY BALL VALVE

CARBON STEEL / STAINLESS STEEL

DESIGN FEATURE

- 2 Pieces body design
- Blow-Out-Proof stem design
- ISO 5211 mounting flange
- Handle with locking device
- End connection : Threaded end
- Seal welding body design for 6000 PSI

3000PSI - Full bore - 1/4" - 2" (DN8-DN50)
Reduced bore - 2" (DN50)
6000PSI - Full bore - 1/4" - 2" (DN8 - DN50)

Body	ASTM A351 Gr.CF8M
Ball / Stem	CF8M / SS316
Seat	Delrin / Peek
Working Pressure	3000 / 6000 PSI (PN210/420)
Temperature Range	-4 to 176ºF (-20 to 80ºC) for Derlin -4 to 500ºF (-20 to 260ºC) for Peek

DESIGN FEATURE

- 3 Pieces body design
- ISO 5211 mounting flange
- Blow-Out-Proof stem design
- Anti-static device
- Bar material body
- End connection : Threaded, Socket weld, Butt weld end

3000PSI - Full bore - 1/4" - 2" (DN8 - DN50)
6000PSI - Full bore - 1/4" - 2" (DN8 - DN50)
3000PSI - Reduce bore - 1/4" - 2" (DN8 - DN50)
6000PSI - Reduce bore - 1/4" - 2" (DN8 - DN50)

Body	AISI 1045 / AISI 316 (bar material)
Ball / Stem	CF8M / 17-4 PH
Seat	Delrin / Peek
Working Pressure	HPV-40 3000 PSI (PN210) HPV-41 6000 PSI (PN420)
Temperature Range	-4 to 176ºF (-20 to 80ºC) for Delrin -4 to 500ºF (-20 to 260ºC) for Peek

DESIGN FEATURE

- 1/2" - 2"
- Design as per ANSI B16.34 Class 1500 / 2500
- ISO 5211 mounting flange
- Blow-Out-Proof stem design
- Anti-static device
- ANSI B16.10 Class 1500 / 2500
- ANSI B16.5 Class 1500 / 2500 RTJ

Body	AISI 1045 / AISI 316 (bar material)
Ball / Stem	CF8M / 17-4 PH
Seat	Delrin / Peek
Temperature Range	-4 to 176ºF (-20 to 80ºC) for Delrin -4 to 500ºF (-20 to 260ºC) for Peek

*Specification given are subject to changed without further notice.

DESIGN FEATURE

- 1/4" - 2" (DN8 - DN50)
- Blow-Out-Proof stem design
- 3 Seat design
- ISO 5211 direct mounting flange
- End connection : Threaded end

Body	ASTM A351 Gr.CF8M (1.4408)
Ball / Stem	CF8M / SS316
Seat	RTFE
Working Pressure	1/4" - 2" 1000 PSI (PN63)
Temperature Range	-4 to 365ºF (-20 to 180ºC)

DESIGN FEATURE

- 1/4" - 2" (DN8 - DN50)
- Blow-Out-Proof stem design
- 4 Seats design
- ISO 5211 direct mounting flange
- End connection : Threaded, Socket weld, Butt weld end

Body	ASTM A351 Gr.CF8M (1.4408)
Ball / Stem	CF8M / SS316
Seat	RTFE (15% Glass fiber filled)
Working Pressure	1/4" - 2" 1000 PSI (PN63)
Temperature Range	-4 to 365ºF (-20 to 180ºC)

DESIGN FEATURE

- 1/4" - 4" (DN8 - DN100)
- Blow-Out-Proof stem design
- 5 Seats design
- ISO 5211 direct mounting flange
- End connection : Threaded, Socket weld, Butt weld end

Body	ASTM A351 Gr.CF8M (1.4408)
Ball / Stem	CF8M / SS316
Seat	RTFE (15% Glass fiber filled)
Working Pressure	1/4" - 2" 800 PSI (PN40) 2-1/2" - 3" 600 PSI (PN40) 4" 400 PSI (PN25)
Temperature Range	-4 to 365ºF (-20 to 180ºC)

CAST BALL VALVE
CF3M
STAINLESS STEEL

MERCOID
Tel: 03-5569 2933 (6 Lines)
Fax: 03-5569 2588, 5569 2788
Email: mercoid@mercoid.com.my,
valmicro@valmicro.com.my
http://www.mercoid.com.my

DESIGN FEATURE

- Tube bore
- 1/2" - 4" (DN15 - DN100)
- Design as per ANSI B16.34 / BPE
- Blow-Out-Proof stem design
- ISO 5211 direct mounting flange
- End connection :
  Tri-Clamp, BPE / ISO /
  DIN Ext. tube end
- Option : Cavity filled seat,
  Extended stem, Purge port,
  Anti-static device

Body	ASTM A351 Gr.CF3M
Ball / Stem	ASTM A351 Gr.CF3M / SS316L
Seat	TFM1600
Working Pressure	1/2" - 2" 1000 PSI (PN63)
	2-1/2" - 4" 720 PSI (PN40)
Temperature Range	-40 to 356ºF (-40 to 180ºC)

SANITARY BALL VALVE
STAINLESS STEEL

DESIGN FEATURE

- Tube bore
- 1/2" - 4" (DN15 - DN100)
- Blow-Out-Proof stem design
- End connection :
  Tri-Clamp, 3A tube end,
  DIN 11850 tube end

Option : Cavity filled seat

Option : Locking device, Cavity filled seat

Option : Cavity filled seat

Body	ASTM A351 Gr.CF8M
Ball / Stem	CF8M / SS316
Seat	TFM1600
Working Pressure	1/2" - 2" 1000 PSI (PN63)
	2-1/2" - 4" 800 PSI (PN40)
Temperature Range	-4 to 356ºF (-20 to 180ºC)

CASTING BALL VALVE
SUPER ALLOY




PNEUMATIC ACTUATED VALVE

AVAILABLE RANGE	Screwed ball valve	1/4" - 8"
	Flanged ball valve	1/2" - 12"
	Multi-way ball valve	1/2" - 8"
	Butterfly valve	11/2" - 24"
Limit Switch Box	Weather proof	
	Explosion proof	
	Special material housibg	
Air Filter	AFC Series	
	BFC Series	
Positioner	PPL / PPP Pneumatic-Pneumatic	
	EPL / EER Electro-Pneumatic	
Solenoid Valve	5/2 Way for spring return	
	3/2 Way for double acting	
Actuator	Double acting	
	Spring return	

*Specification given are subject to changed without further notice.

ELECTRIC ACTUATED VALVE

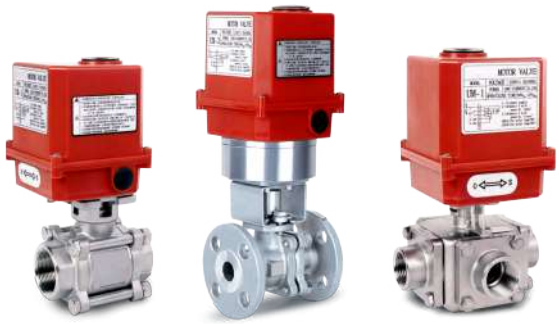

AVAILABLE RANGE	Screwed ball valve	1/4" - 4"
	Flanged ball valve	1/2" - 12"
	Multi-way ball valve	1/2" - 8"
	Butterfly valve	1-1/2" - 24"

DOUBLE BLOCK & BLEED VALVE

MERCOID
Tel: 03-5569 2933 (6 Lines) Fax: 03-5569 2588, 5569 2788
Email: mercoid@mercoid.com.my, valmicro@valmicro.com.my
http://www.mercoid.com.my

FLOATING PATTERN - DBB

- Standard configuration body with interchangeable process connections
- Bore sizes from 10mm up to 250mm
- Pressure rated up to ASME B16.5 class 2500 and API 6A 10,000 psi
- Double block and bleed configuration
- Lockable and Anti-tamper devices available
- Choice of venting valve design
- Materials available includes:
  ASTM A182 F316 Stainless steel, ASTM A182 F51/55 Duplex & Super Duplex and ASTM B564 UNS N06625 Inconel
- Fire safe design

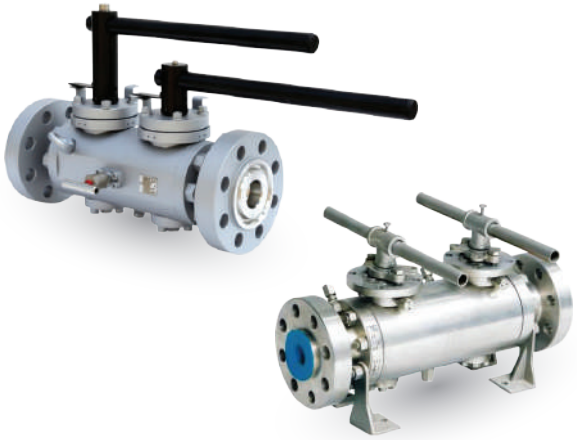

TRUNNION PATTERN - DBB

- 1/2" - 14 NPT Outlet size - Standard
- 1/2" - 14 NPT Vent size - Standard
- Other Outlet/Vent sizes and thread types are available
- Sample Probes/Injection Quills can be fitted to flanged side
- Isolation ball valves and venting needle valve as standard
- Materials available include:
  ASTM A182 F316 Stainless steel, ASTM A182 F51/55 Duplex & Super Duplex and ASTM B564 UNS N06625 Inconel 625 amongst others
- Various trim materials available
- Standard design are fire safe
- Lockable and anti-tamper devices available
- Screwed check valve option available

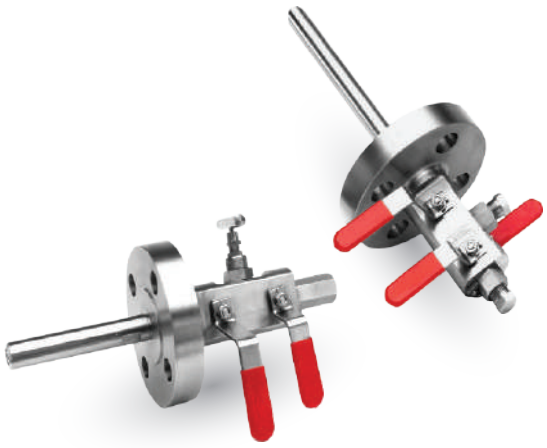

SAMPLING & INJECTION - DBB

- Bubble tight metal to metal seat for positive shut off
- Two piece non-rotating hardened tip for first time seal and long service life
- Pressure responsive multi-ring / piston packing for compression and pressure dynamic sealing
- PEEK body bonnet seal for high pressure and high temperature
- Separate shut off for vent to prevent unwanted loss of process medium
- OS&Y valves available alongside standard needle valves to cater for all customer needs
- Any combination of Vent/Outlet sizes and types available on request
- Raised Face and Ring Type Joint connection options available
- Pressure rated up to ASME B16.5 class 2500

*Specification given are subject to changed without further notice.

BUTTERFLY VALVE

A butterfly valve is a quarter-turn rotational motion valve, that is used to stop, regulate, and start flow. Butterfly valves are easy and fast to open. A 90° rotation of the handle provides a complete closure or opening of the valve. Large butterfly valves are usually equipped with a so-called gearbox, where the handwheel by gear is connected to the stem. This simplifies the operation of the valve, but at the expense of speed.

Types of butterfly valve

Butterfly valves have a short circular body, a round disc, metal-to-metal or soft seats, top and bottom shaft bearings, and a stuffing box. The construction of a butterfly valve body varies. A commonly used design is the wafer type that fits between two flanges. Another type, the lug wafer design, is held in place between two flanges by bolts that join the two flanges and pass through holes in the valve's outer casing. Butterfly valves are even available with flanged, threaded and butt welding ends, but they are not often applied.

Butterfly valve possess many advantages over gate, globe, plug, and ball valve, especially for large valve applications. Savings in weight, space, and cost are the most obvious advantage. The maintenance costs are usually low because there is a minimal number of moving parts and there are no pockets to trap fluids. Butterfly valves are especially well-suited for the handling of large flows of liquids or gases at relatively low pressures and for the handling of slurries or liquids with large amounts of suspended solids. Butterfly valve are built on the principle of a pipe damper. The flow control element is a disc of approximately the same diameter as the internal diameter of the adjoining pipe, which rotates on either a vertical or horizontal axis. When the disc lies parallel to the piping run, the valve is fully opened. When the disc approaches the perpendicular position, the valve is shut. Intermediate positions, for throttling purposes, can be secured in place by handle-locking devices.

SOFT SEAT BUTTERFLY VALVE
WAFER / LUG

VARIMEX Valves® CO. LTD.

MERCOID
Tel: 03-5569 2933 (6 Lines) Fax: 03-5569 2588, 5569 2788
Email: mercoid@mercoid.com.my, valmicro@valmicro.com.my
http://www.mercoid.com.my

FIG V102
Lug type

FIG V101
Wafer type

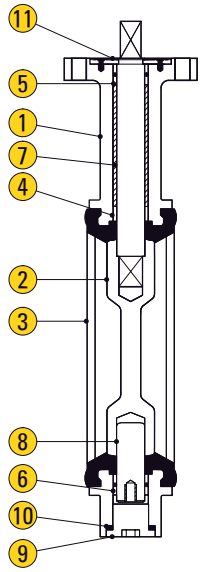

DN25-300 sizes

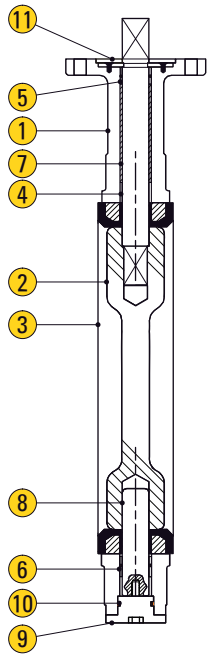

DN350-1200 sizes

APPLICATION

Suitable for water, steam, oil, gases and non-abrasive media (Refer to corrosion resistance table for valve materials selection).

SPECIFICATION

Face To Face Dimension	BS EN 558-1 and API 609
Standard Compliance	Conform to BS EN 593 and API 609
End Connection	Wafer type to suit DIN, BS, ANSI and JIS flanges
Pressure Rating	16 Bar for DN50 to DN600 10 Bar for DN700 to DN1200 (optional 16 Bar)
Temperature (Seat)	-10ºC to 80ºC NBR, 15ºC to 120ºC EPDM -10ºC to 150ºC Viton, 45ºC to 180ºC PTFE
Top Flange Dimensions	ISO 5211
Actuation	Lever operated for DN50 to DN200 (Gear operated on request) Gear operated for DN250 & above
Optional	Pneumatic or electric actuated

MATERIAL

Parts		Available Material
1	Body	GG25 Cast Iron
		GGG40 Ductile Iron
		AISI 304 Stainless Steel
		AISI 316 Stainless Steel
2	Disc	AISI 304 Stainless Steel
		AISI 316 Stainless Steel
		Aluminium Bronze
		PFA Coated AISI 304
3	Seat	EPDM (-30ºC ~ +120ºC)
		NBR (-20º C ~ +110ºC)
		NEOPRENE (-20ºC ~ +110ºC)
		PTFE + EPDM (-30ºC ~ +120ºC)
4/5/6	Bushing	PTFE
7	Upper Stem	AISI 420 Stainless Steel
		AISI 316 Stainless Steel
8	Lower Stem	AISI 420 Stainless Steel
		AISI 316 Stainless Steel
9	Cap	Carbon Steel
10	O-Ring	NBR / Copper
11	Stopper Plate	Carbon Steel

*Specification given are subject to changed without further notice.

MERCOID
Tel: 03-5569 2933 (6 Lines) Fax: 03-5569 2588, 5569 2788
Email: mercoid@mercoid.com.my, valmicro@valmicro.com.my
http://www.mercoid.com.my

BUTTERFLY VALVE
WAFER / LUG

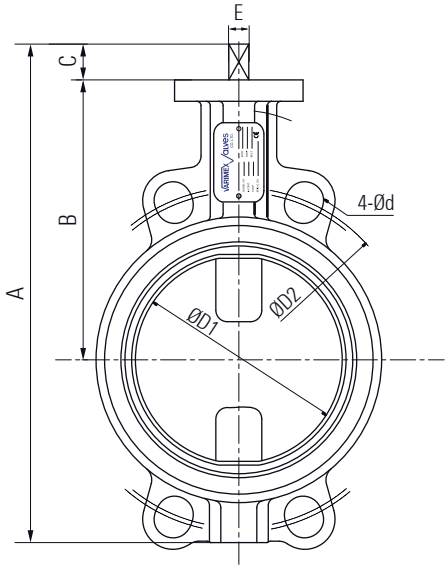

Wafer Type

FIG V102
Lug type

FIG V101
Wafer type

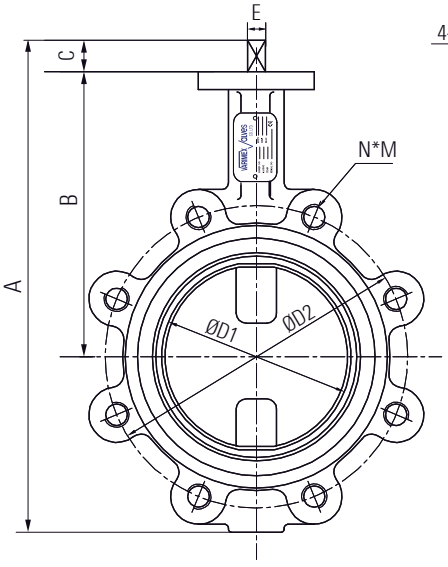

Lug Type

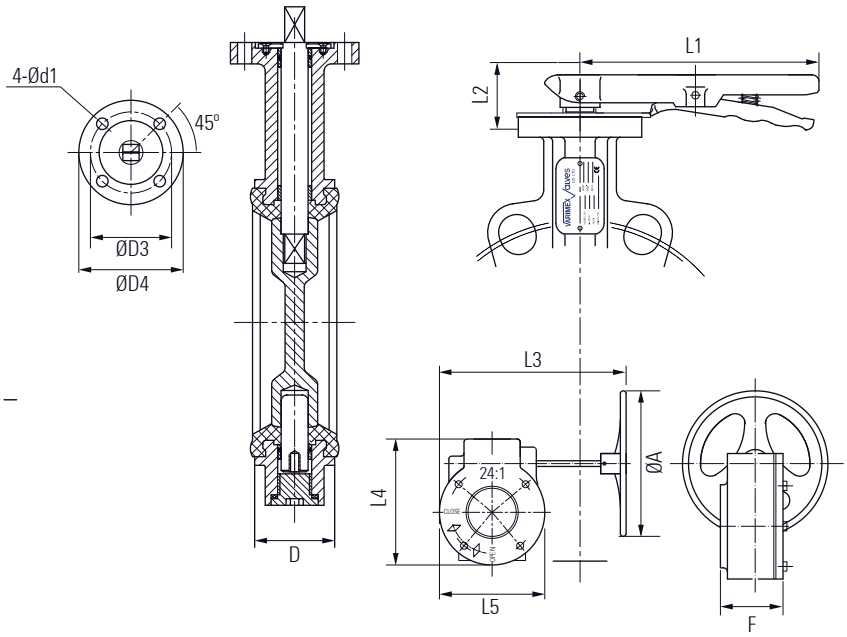

DIMENSIONS

Unit : mm

Size (DN)	ØD1	ØD2	ØD3	ØD4	4-ød	4-ød1	A	B	C	D	E	L1	L2	L3	L4	L5	ØA	F	Weight(Kg)		
																			Free Shaft	Lever Op.	Gear Op.
25/32	31.5	85	42	55	18	6	145	92	12	33	9	100	28	245	125	105	152	68	1.0	1.3	6.2
40	38	110	42	55	18	6	155	98	12	33	9	100	28	245	125	105	152	68	1.0	1.3	6.2
50	50.8	125	50	65	18	7	205	126	16	43	9	180	28	245	125	105	152	68	2.1	1.3	7.3
65	65.1	145	50	65	18	7	218	133	16	46	9	180	28	245	125	105	152	68	2.5	2.8	7.7
80	78.5	160	50	65	18	7	244	150	16	46	9	180	28	245	125	105	152	68	3.0	3.3	8.2
100	102.0	180	70	90	18	10	295	170	19	52	11	284	28	245	125	105	152	68	4.8	5.2	10.0
125	125.1	210	70	90	18	10	321	181	25	56	14	284	28	245	125	105	152	68	6.6	7.0	11.8
150	150.1	240	70	90	22	10	349	196	25	56	14	284	28	245	125	105	152	68	7.5	7.9	12.7
200	199.8	295	102	125	22	12	428	238	30	60	17	350	38	400	185	153	300	85	13.8	14.9	26.1
250	248.3	355	102	125	26	12	487	258	39	68	22	350	38	400	185	153	300	85	21.2	22.3	33.5
300	298.3	410	102	125	26	12	574	300	39	78	22	350	38	400	185	153	300	85	31.5	42.6	45.9

*Specification given are subject to changed without further notice.

BUTTERFLY VALVE
WAFER / LUG

VARIMEX Valves® CO. LTD.

MERCOID
Tel: 03-5569 2933 (6 Lines) Fax: 03-5569 2588, 5569 2788
Email: mercoid@mercoid.com.my, valmicro@valmicro.com.my
http://www.mercoid.com.my

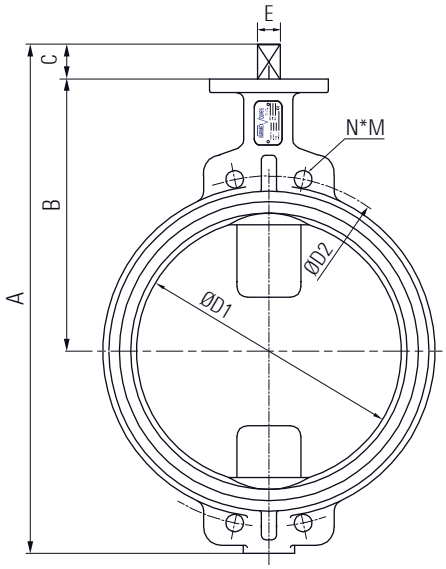

Wafer Type

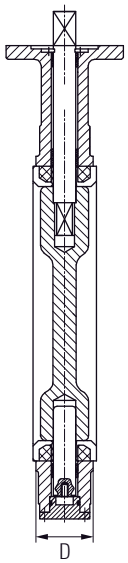

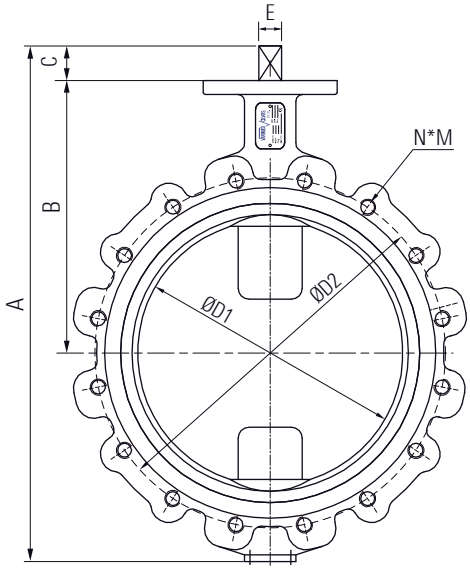

Lug Type

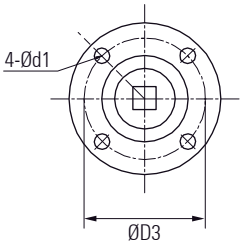

DIMENSIONS

Unit : mm

Size (DN)	ØD1	ØD3	ØD4	PN10		PN16		4-ød1	A	B	C	D	E	ØD3	Weight(Kg)			
															Wafer Type		Lug Type	
				ØD2	nxM	ØD2	nxM								Free Shaft	Gear Op.	Free Shaft	Gear Op.
350	333	102	125	460	16xM20	470	16xM24	12	680	358	45	78	36	F12	41.3	55.7	69.0	83.5
400	340	140	175	515	16xM24	525	16xM27	18	748	400	51	102	36	F14	61.0	93.0	90.0	125.0
450	440	140	175	565	20xM24	585	20xM27	18	788	422	51	114	36	F14	79.0	111.0	119.0	151.0
500	490	140	175	620	20xM24	650	20xM30	18	885	480	57	127	36	F14	128.0	162.5	179.0	213.5
600	593.0	165	210	725	20xM27	770	20xM33	23	1086	562	70	154	46	F16	188.0	236.0	253.0	301.0

* For larger size up to DN1200 also available on request

*Specification given are subject to changed without further notice.

MERCOID
Tel: 03-5569 2933 (6 Lines) Fax: 03-5569 2588, 5569 2788
Email: mercoid@mercoid.com.my, valmicro@valmicro.com.my
http://www.mercoid.com.my

PTFE SEATED BUTTERFLY VALVE WAFER / LUG

VARIMEX Valves® CO. LTD.

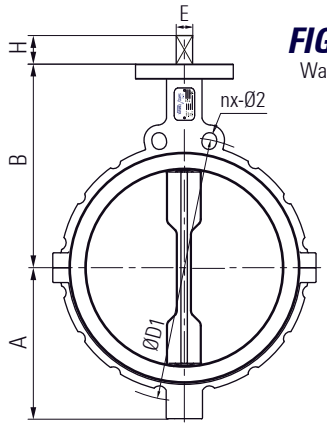

FIG V108
Wafer Type

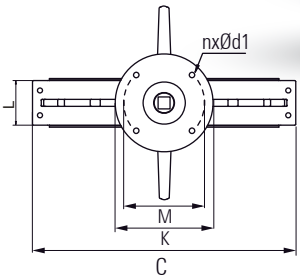

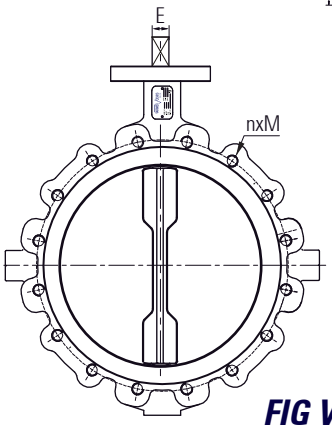

FIG V109
Lug Type

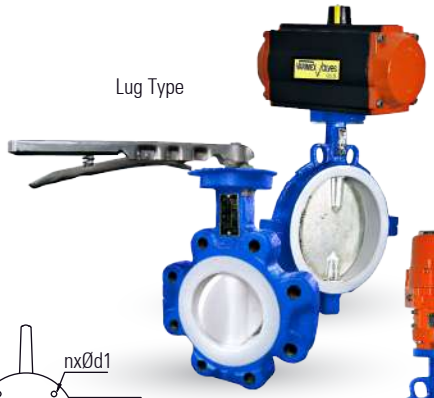

SPECIFICATION

Face To Face Dimension	BS EN 558-1 and API 609
Standard Compliance	Conform to BS EN 593 and API 609
End Connection	Wafer type to suit DIN, BS, ANSI and JIS flanges
Pressure Rating	16 Bar for DN50 to DN600 10 Bar for DN700 to DN1200 (optional 16 Bar)
Temperature (Seat)	-10ºC to 80ºC NBR, 15ºC to 120ºC EPDM -10ºC to 150ºC Viton, 45ºC to 180ºC PTFE
Top Flange Dimensions	ISO 5211
Actuation	Lever operated for DN50 to DN200 (Gear operated on request) Gear operated for DN250 & above
Optional	Pneumatic or electric actuated

APPLICATION

Suitable for water, steam, oil, gases and non-abrasive media
(Refer to corrosion resistance table for valve materials selection).

MATERIAL

Parts		Material
1	Body	GG25 Cast Iron
		GGG40 Ductile Iron
		AISI 304 Stainless Steel
		AISI 316 Stainless Steel
2	Disc	AISI 316 Stainless Steel
		AISI 304 + PTFE Lined
3	Seat	PTFE + EPDM (-30ºC ~ +120ºC)
		FULLY PTFE (-30ºC ~ +180ºC)
4/5/6	Bushing	PTFE
7	Upper Stem	AISI 316 Stainless Steel
8	Lower Stem	AISI 316 Stainless Steel
10	O-Ring	NBR
11	Disc Spring	Stainless Steel
12	Bolt	Stainless Steel

DIMENSIONS

Unit : mm

Size (DN)	PN10		PN16		4-ød1	A	B	C	H	L	E	K	M
	ØD1	nxM	ØD1	nxM									
50	125	4xM16	125	4xM16	7	77	135	130	16	43	9	77	50
65	145	4xM16	145	4xM16	7	91	138	150	16	46	9	77	50
80	160	8xM16	160	8xM16	7	95	138	164	16	52	9	77	50
100	180	8xM16	180	8xM16	10	121	149	188	19	56	11	92	70
125	210	8xM16	210	8xM16	10	125	173	220	25	56	14	92	70
150	240	8xM20	240	8xM20	10	150	187	252	25	60	14	92	70
200	295	8xM20	295	12xM20	12	182	225	305	30	68	17	115	102
250	350	12xM20	355	12xM24	12	226	247	370	39	78	22	115	102
300	400	16xM20	410	12xM24	12	260	285	430	39	56	22	140	125
350	460	16xM20	470	16xM24	12	275	335	470	45	60	36	140	125
400	515	16xM24	525	16xM27	12	305	410	565	51	68	36	197	140
450	565	20xM24	585	20xM27	12	338	440	620	51	68	36	197	140
500	620	20xM24	650	20xM30	12	375	495	695	57	78	36	197	140

*Specification given are subject to changed without further notice.

HIGH-PERFORMANCE BUTTERFLY VALVE WAFER / LUG

MERCOID
Tel: 03-5569 2933 (6 Lines) Fax: 03-5569 2588, 5569 2788
Email: mercoid@mercoid.com.my, valmicro@valmicro.com.my
http://www.mercoid.com.my

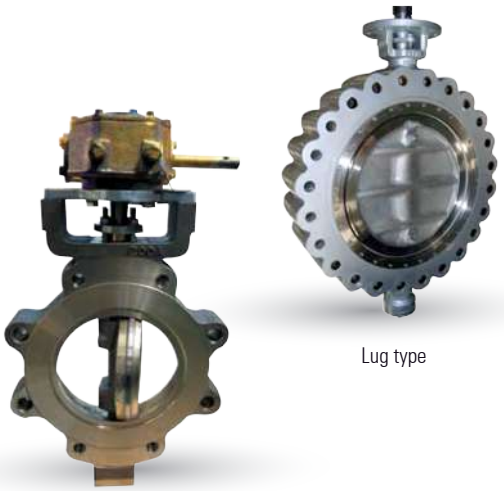

Wafer type

Lug type

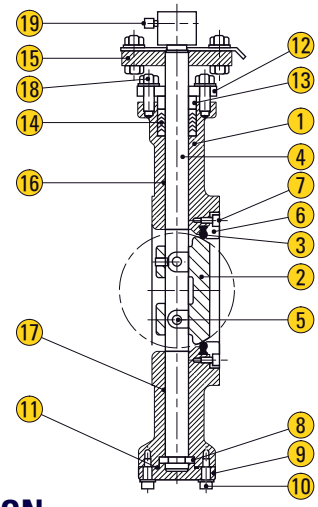

SPECIFICATION

Face To Face Dimension	BS EN 558-1 and API 609
Standard Compliance	Conform to BS EN 593 and API 609
End Connection	Wafer type to suit DIN, BS, ANSI and JIS flanges
Pressure Rating	16 Bar for DN50 to DN600 10 Bar for DN700 to DN1200 (optional 16 Bar)
Temperature (Seat)	-10ºC to 80ºC NBR, 15ºC to 120ºC EPDM -10ºC to 150ºC Viton, 45ºC to 180ºC PTFE
Top Flange Dimensions	ISO 5211
Actuation	Lever operated for DN50 to DN200 (Gear operated on request) Gear operated for DN250 & above
Optional	Pneumatic or electric actuated

APPLICATION

Suitable for water, steam, oil, gases and non-abrasive media (Refer to corrosion resistance table for valve materials selection).

MATERIAL

	Parts	Material
1	Body	Ductile Iron, Cast Steel, Stainless Steel, AL-Bronze, Duplex
2	Disc	Cast Steel, Stainless Steel, AL-Bronze
3	Seat	SS. Steel, Teflon, Rubber
4	Stem	SS. Steel (304, 316, 316L, 630, 17-4PH, Monel)
5	Disc Pin	Stainless Steel
6	Retainer	Stainless Steel, Ductile Iron, Mild Steel
7	Retainer Bolt	Stainless Steel
8	Thrust Plate	Bronze, Stainless Steel
9	Bottom Cover	Stainless Steel, AL-Bronze
10	Bottom Bolt	Stainless Steel
11	Bottom Gasket	Teflon, Graphite
12	Packing Gland	SS. Steel
13	Gland Ring	Brass, Stainless Steel
14	Packing	Teflon, Graphite, Rubber
15	Top Flange	SS. Steel
16 / 17	Stem Bearing	Metaloplast, Stainless Steel
18	Bolt & Nut	Stainless Steel
19	Lever	Steel, Ductile Iron

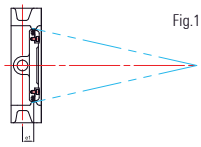

Fig.1

SINGLE OFFSET (Fig.1)
The centre of rotation is moved back from the centreline of the valve disc. The seat and seal are designed conically and on centre. This design relies on a frictional, interference seal and so isapplicable only to soft seated valves.

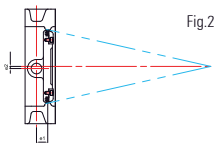

Fig.2

DOUBLE OFFSET (Fig.2)
The centre of rotation is moved from the centerline of the valve body. The seat and seal design remains conical and on centre. This design again relies on a frictional, interference seal, but the length of rotation over which this friction occurs is reduced, allowing a larger range of processresistant seat materials to be used. However these materials must be relatively soft or highly elastic to prevent "jamming".

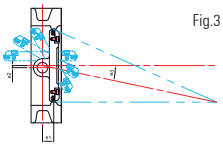

Fig.3

TRIPLE OFFSET (Fig.3)
The centreline of the cone is rotated away from the valve centreline resulting in an ellipsoidal profile and providing the third offset. With this geometry, seat seal interference is completely eliminated ensuring long sealing life. The result is a torque seated, process pressure aided FRICTIONLESS seal. The geometry allows the body seat to be used as the closed limit stop, aiding operator adjustment. The Triple Offset design is ideally suited to metal seated valves providing bubble-tight performance on high temperature, high pressure and firesafe applications.

DESIGN FEATURES

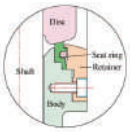

Soft Seated (-45ºC ~ +180ºC)
The RTFE seat ring is well-suited for extremely corrosive hemical solutions and high-temperature fluids of up to +210ºC

Applications
Pharmaceuticals, water, jet fuel, Saturated steam, chlorine, ammonia, natural, gas vacuum, oxygen, nitrogen, air-conditioning chilled, exhaust gas, town gas, hot water.
Abrasives, suspended solids, scaling mediums

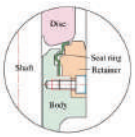

Metal Seated (up to 450ºC)
The metal seat ring allows control of extremely high-temperature fluids, thereby replacing conventional gate valves, and ball valves.

Applications
High temperature, low temperature, abrasives, fly ash, slurries, steam, air, combustion gas, exhaust gas, netroten gas, sulfurous-acid gas.

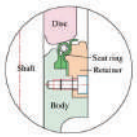

Fire Seated (-45ºC ~ +210ºC)
• PTFE-metal-seat system
- Bidirectional sealing and fire safe design.

• Bidirectional
- The primary PTFE : seat ring will be replenished with a secondary metal back-up ring. This metal seat provides a mechanical load to energies the PTFE-seat. In combination with the line pressure a bidirectional sealing against the design pressure is obtained.

• Fire safe design
- After a fire, when the PTFE-seat ring has burned away, the secondary metal seat gives bidirectional sealing. This sealing systems meets the fire test requirement

Applications
Fire-safe installations, abrasives, slurries, steam

*Specification given are subject to changed without further notice.

MERCOID
Tel: 03-5569 2933 (6 Lines) Fax: 03-5569 2588, 5569 2788
Email: mercoid@mercoid.com.my, valmicro@valmicro.com.my
http://www.mercoid.com.my

HIGH-PERFORMANCE BUTTERFLY VALVE WAFER TYPE

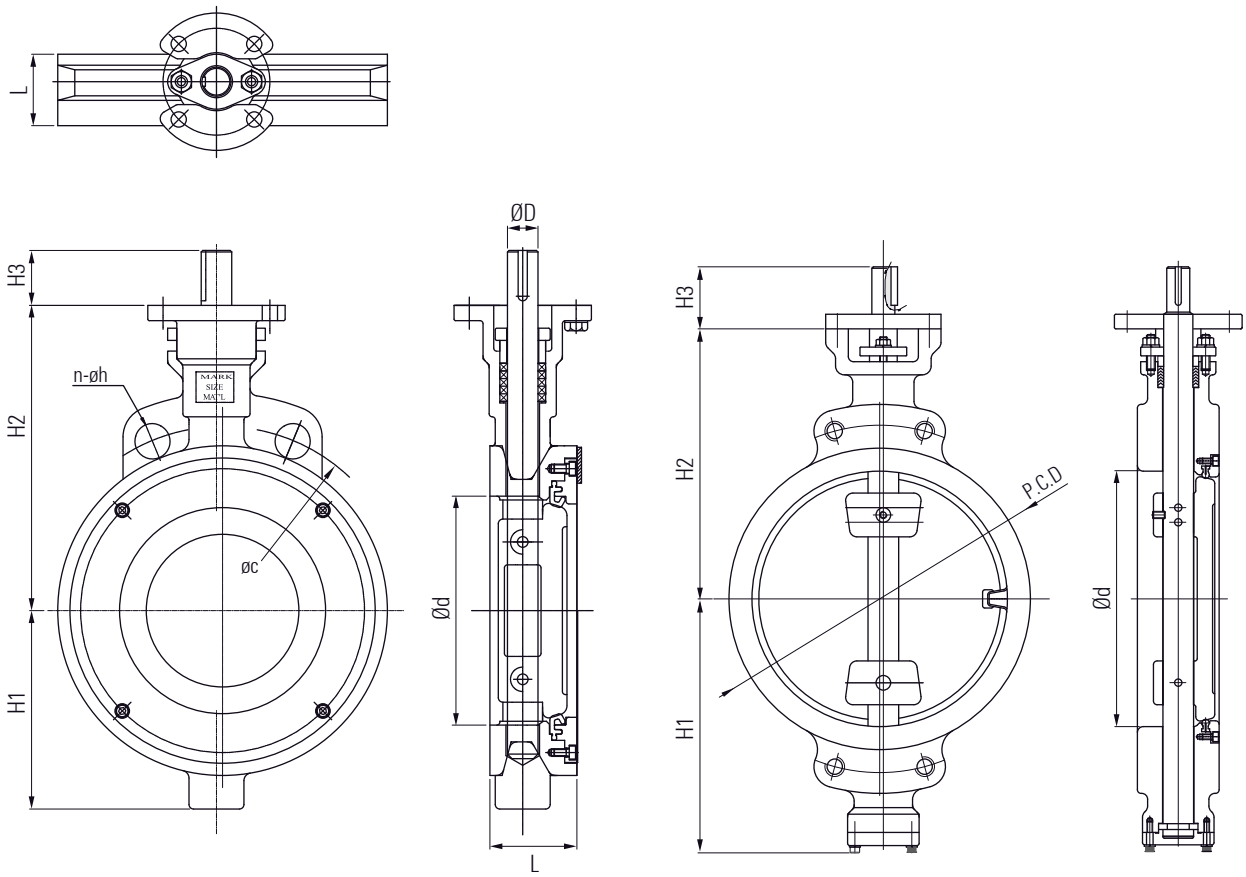

DIMENSIONS

Unit : mm

Size		Ød	L		H1	H2	H3	ØD	Top Flan GE Type	JIS 10K			ANSI 150LB			BS 4504 PN10			Weight (approx) (Kg)
inch	mm		#150	#300						ØC	n	h	ØC	n	h	ØC	n	h	
2"	50	50	43	43	60	180	35	16	F 07	120	4	19	120.5	4	19	125	4	19	4.5
2.5"	65	65	46	46	70	180	35	16	F 07	140	4	19	139.5	4	19	145	4	19	5.5
3"	80	80	48	48	75	185	35	19	F 07	150	8	19	152.5	4	19	160	8	19	9.0
4"	100	100	54	54	100	200	35	19	F 07	175	8	19	190.5	8	19	180	8	19	10.0
5"	125	125	57	57	110	215	35	20	F 07	210	8	23	216.0	8	22	210	8	19	13.0
6"	150	150	57	59	130	235	35	20	F 07	240	8	23	241.5	8	22	240	8	23	17.0
8"	200	200	64	73	150	255	50	25	F 10	290	12	23	298.5	8	22	295	8	23	26.0
10"	250	250	71	83	245	300	50	32	F 10	355	12	25	362.0	12	25	350	12	23	40.0
12"	300	300	81	92	285	320	50	32	F 10	400	16	M22	432.0	12	25	400	12	23	68.0
14"	350	350	92	117	342	440	80	42	F 14	445	16	M22	476.0	12	29	460	16	M20	93.0
16"	400	400	102	133	380	460	80	42	F 14	510	16	M24	539.5	16	29	515	16	M24	121.0
18"	450	450	114	149	402	492	120	50	F 16	565	20	M24	578.0	16	32	565	20	M24	144.0
20"	500	500	127	159	432	552	120	50	F 16	620	20	M24	635.0	20	32	620	20	M24	160.0
22"	550	550	154	159	465	572	120	65	F 16	680	20	M30	692.2	20	32	-	-	-	228.0
24"	600	600	154	181	510	610	120	65	F 16	730	24	M30	749.5	20	35	725	20	M27	284.0

*Specification given are subject to changed without further notice.

HIGH-PERFORMANCE BUTTERFLY VALVE LUG TYPE

MERCOID
Tel: 03-5569 2933 (6 Lines) Fax: 03-5569 2588, 5569 2788
Email: mercoid@mercoid.com.my, valmicro@valmicro.com.my
http://www.mercoid.com.my

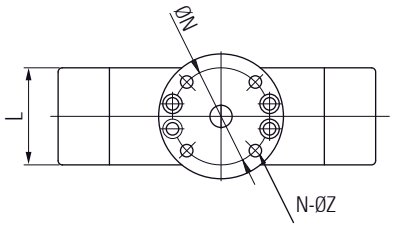

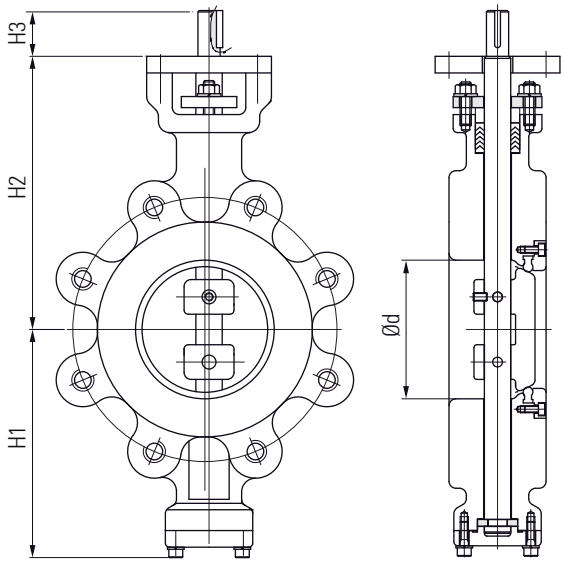

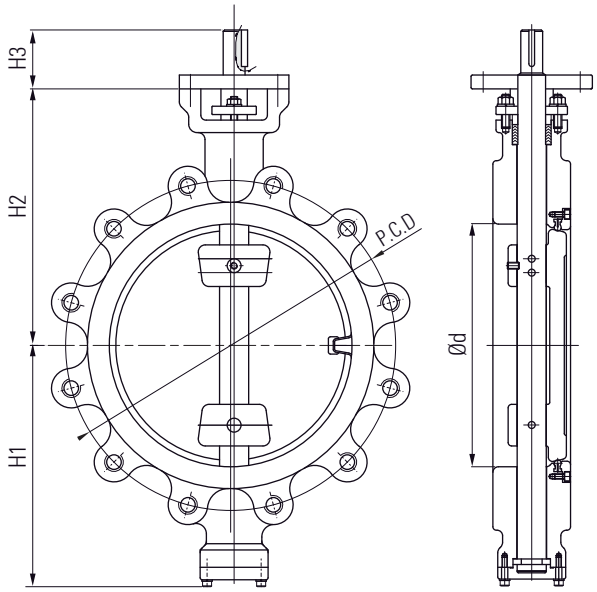

DIMENSIONS

Unit : mm

Size		Ød	L		H1	H2	H3	ØD	Top Flan GE Type	JIS 10K			ANSI 150LB			BS 4504 PN10			Weight (approx) (Kg)
inch	mm		#150	#300						ØC	n	h	ØC	n	h	ØC	n	h	
2″	50	50	43	43	115	182	45	16	F 07	120	4	19	120.5	4	19	125	4	M16	4.5
2.5″	65	65	46	46	130	200	45	16	F 07	140	4	19	139.5	4	19	145	4	M16	5.5
3″	80	80	48	48	140	215	45	19	F 07	150	8	19	152.5	4	19	160	8	M16	9.0
4″	100	100	54	54	160	232	45	19	F 07	175	8	19	190.5	8	19	180	8	M16	10.0
5″	125	125	57	57	185	245	45	20	F 07	210	8	23	216.0	8	22	210	8	M16	13.0
6″	150	150	57	59	190	260	45	20	F 07	240	8	23	241.5	8	22	240	8	M20	17.0
8″	200	200	64	73	220	292	65	25	F 10	290	12	23	298.5	8	22	295	8	M20	26.0
10″	250	250	71	83	270	353	65	32	F 10	355	12	25	362.0	12	25	350	12	M20	40.0
12″	300	300	81	92	300	372	65	32	F 10	400	16	M22	432.0	12	25	400	12	M20	68.0
14″	350	350	92	117	342	440	80	42	F 14	445	16	M22	476.0	12	29	460	16	M20	93.0
16″	400	400	102	133	380	460	80	42	F 14	510	16	M24	539.5	16	29	515	16	M24	121.0
18″	450	450	114	149	402	492	120	50	F 16	565	20	M24	578.0	16	32	565	20	M24	144.0
20″	500	500	127	159	432	552	120	50	F 16	620	20	M24	635.0	20	32	620	20	M24	160.0
22″	550	550	154	159	465	572	120	65	F 16	680	20	M30	692.2	20	32	-	-	-	228.0
24″	600	600	154	181	510	610	120	65	F 16	730	24	M30	749.5	20	35	725	20	M27	284.0

*Specification given are subject to changed without further notice.

Y-STRAINER | SIMPLEX | DUPLEX

Y-Strainer

This product is designed for remove foreign matter from pipe lines and provides protection for pumps, meters, valves, and other similar mechanical equipment, which is called as strainer. "Y" Type strainers are named after their shape and normally used for course filtration. But with large filtration area can be used with fine mesh also. The strainer improves the clearance in the medium, and prolongs the life of valves; protect expensive pumps, meters and other equipment. It is suitable for water, air, gas, petroleum, steam and other fluids. A Y-strainer can be installed in either a horizontal or vertical position (Downward flow) with the screen elementpointing downward. This allows the strainer screen to collect material in the strainer at the lowest point of the screen

Strainer – Simplex & Duplex

Simplex strainer are designed for installation in horizontal lines. They are commonly used for liquid service applications. Simplex strainer are generally used where high flow capacity is required. The simplex strainer is serviced by removing the cover, which yields access to the basket. Simplex strainer are also available in a duplex style which consists of two parallel basket strainers and diverting valves, which permit diversion of the flow through one of the strainer elements while the other element is being serviced-an essential feature where flow cannot be interrupted.

Y-STRAINER ANSI STANDARD

CAST IRON / CARBON STEEL / STAINLESS STEEL

MERCOID
Tel: 03-5569 2933 (6 Lines) Fax: 03-5569 2588, 5569 2788
Email: mercoid@mercoid.com.my, valmicro@valmicro.com.my
http://www.mercoid.com.my

VARIMEX Valves® CO. LTD.

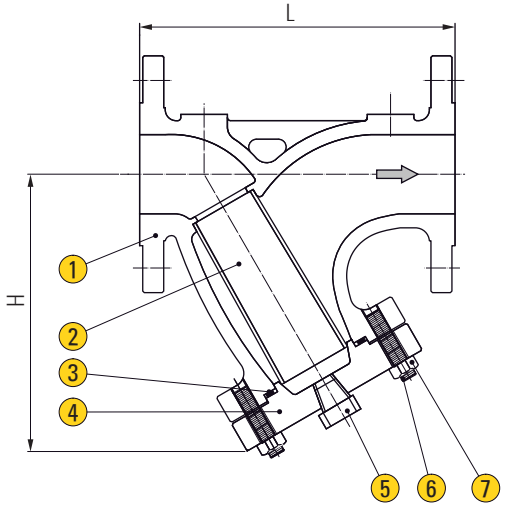

FIG 821 X - X

Material	
- WCB	- CF8
- LCB	- CF8M
- LCC	- CF3
- WC1	- CF3M
- WC6	- CF8C
- C5	

Connection
- 150#RF
- 300#RF
- Butt weld
- Socket weld
- RTJ

APPLICATION

Suitable for water, steam, oil, gases and non-abrasive media
(Refer to corrosion resistance table for valve materials selection).

SPECIFICATION

Face To Face Dimension	ASME B16.10
Preasure Rating	Class 150, 300 and 600
Flange End Dimension	ASME B16.5
BW End Dimension	ASME B16.25
Mesh Size	40 / 60 / 80 / 100
Test and Inspection	API 598
Pressure - Temperature Rating	ASME B16.34

MATERIAL

	Parts	Material				
1	Body	A126	WCB	CF8	CF8M	CF3M
2	Screen	SS304	SS304	SS304	SS316	SS316L
3	Gasket	Graphite				
4	Cover	A126	WCB	CF8	CF8M	CF3M
5	Plug	SS304	SS304	SS304	SS316	SS316L
6	Cover Bolt	HT 8.8	HT 8.8	SS304	SS316	SS316L
7	Cover Nut	HT 8.8	HT 8.8	SS304	SS316	SS316L

CLASS 150 - 300 - 600

Unit : mm

Class	Size (mm)	15	20	25	32	40	50	65	80	100	125	150	200	250	300
150	L	120	140	150	180	190	203	216	241	292	380	406	495	622	699
	H	85	87	114	130	135	145	183	206	228	274	329	440	507	594
	Weight (Kg)	5	6	7	9	10	12	18	21	32	35	48	105	169	215
300	L	140	160	175	229	240	267	292	318	356	400	445	559	622	711
	H	85	87	114	130	135	170	185	235	290	340	375	450	575	665
	Weight (Kg)	6	7	9	11	12	15	18	35	51	80	92	182	285	307
600	L	165	191	216	230	241	292	330	356	432	456	559	660	787	838
	H	120	140	170	175	180	185	200	250	300	318	415	490	595	680
	Weight (Kg)	9	11	14	15	16	35	40	48	90	140	220	360	781	1210

*Specification given are subject to changed without further notice.

MERCOID
Tel: 03-5569 2933 (6 Lines) Fax: 03-5569 2588, 5569 2788
Email: mercoid@mercoid.com.my, valmicro@valmicro.com.my
http://www.mercoid.com.my

Y-STRAINER DIN STANDARD

CAST IRON / CARBON STEEL / STAINLESS STEEL

VARIMEX Valves® CO. LTD.

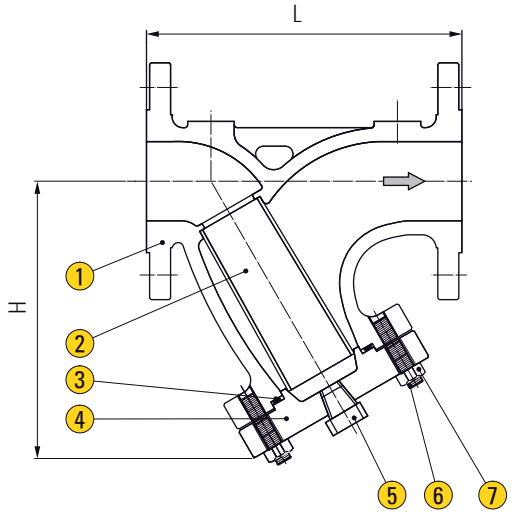

FIG 821 X - X

Material	
- A126	- C5
- WCB / CS	- CF8
- LCB	- CF8M
- LCC	- CF3
- WC1	- CF3M
- WC6	- CF8C

Connection
- PN16
- PN40
- Butt weld
- Socket weld
- RTJ

APPLICATION

Suitable for water, steam, oil, gases and others non-abrasive media (Refer to corrosion resistance table for valve materials selection).

SPECIFICATION

Face To Face Dimension	Series 1 according to EN 558-1
End Connection	Flange end to DIN PN16 and PN40
Perforated Screen Diameter	1mm for DN15 to DN50 1.25mm for DN100 to DN300 1.6mm for DN100 to DN300
Mesh Size	20 / 40 / 60 / 80 / 100

MATERIAL

	Parts	Material				
1	Body	A126	WCB	CF8	CF8M	CF3M
2	Screen	SS304	SS304	SS304	SS316	SS316L
3	Gasket	Graphite				
4	Cover	A126	WCB	CF8	CF8M	CF3M
5	Plug	SS304	SS304	SS304	SS316	SS316L
6	Cover Bolt	HT 8.8	HT 8.8	SS304	SS316	SS316L
7	Cover Nut	HT 8.8	HT 8.8	SS304	SS316	SS316L

DIMENSIONS

Unit : mm

Class	Size (mm)	15	20	25	32	40	50	65	80	100	125	150	200	250	300
PN16	L	130	150	160	180	200	230	290	310	350	400	480	600	730	850
	H	90	100	115	135	150	160	180	215	235	280	320	405	540	680
PN40	L	130	150	160	180	200	230	290	310	350	400	480	600	730	850
	H	70	80	88	100	125	140	170	190	225	260	320	420	540	680

*Specification given are subject to changed without further notice.

Y-STRAINER

FORGED CARBON STEEL / STAINLESS STEEL

MERCOID
Tel: 03-5569 2933 (6 Lines) Fax: 03-5569 2588, 5569 2788
Email: mercoid@mercoid.com.my, valmicro@valmicro.com.my
http://www.mercoid.com.my

DONG KANG

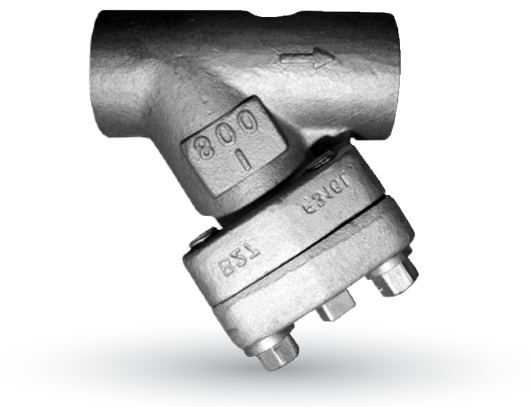

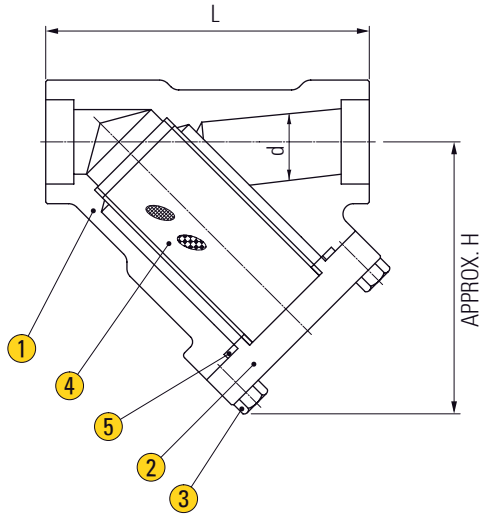

FIG GD-YST

APPLICATION

Suitable for water, steam, oil, gases and non-abrasive media
(Refer to corrosion resistance table for valve materials selection).

SPECIFICATION

Design and Manufactured	BS 5352
Preasure Rating	Class 650, 800 and 1500
Socket Weld Dimension	ASME B16.11
Mesh Size	40 / 60 / 80 / 100
Threaded End Dimension	ASME 1.20.1
Test and Inspection	API 598

MATERIAL

	Parts	Material		
1	Body	A105 (1)	F304	F316
2	Cover	A105 (1)	F304	F316
3	Cover Bolt	A193-B7	A193-B8	A193-B8
4	Screen	SUS304	SUS304	SUS316
5	Gasket	SUS304 + Graphite	SUS304 + Graphite	SUS316 + Graphite

Note : (1) A105 also available with 0.25% Maximum Carbon.

CLASS 600 - 800 - 1500

Unit : mm / inch

Class	Valve Size		Center to Top, Open		End to End		End to Hub (Dia)		Approx. Weight	
			H		L		d			
	DN	in	mm	in	mm	in	mm	in	kg	lb
600 / 800	15	1/2	88	3.46	98	3.85	13	0.51	1.8	4.0
	20	3/4	88	3.46	98	3.85	18	0.71	2.0	4.4
	25	1	105	4.13	120	4.72	23	0.90	2.3	5.1
	32	1-1/4	123	4.48	140	5.51	29	1.14	5.8	12.8
	40	1-1/2	123	4.48	140	5.51	35	1.37	6.0	13.2
	50	2	142	5.59	170	6.69	38	1.50	6.7	14.8
1500	15	1/2	88	3.46	98	3.85	13	0.51	1.8	4.0
	20	3/4	105	4.13	120	4.72	18	0.71	2.3	5.1
	25	1	123	4.84	140	5.51	23	0.90	5.8	12.8
	32	1-1/4	123	4.84	140	5.51	29	1.14	7.1	15.7
	40	1-1/2	142	5.59	170	6.69	35	1.37	9.0	19.8
	50	2	170	6.69	240	7.87	38	1.50	14.4	31.7

* Other materials also available on application

*Specification given are subject to changed without further notice.

MERCOID
Tel: 03-5569 2933 (6 Lines) Fax: 03-5569 2588, 5569 2788
Email: mercoid@mercoid.com.my, valmicro@valmicro.com.my
http://www.mercoid.com.my

Y-STRAINER FLANGE

FORGED CARBON STEEL / STAINLESS STEEL

DONG KANG

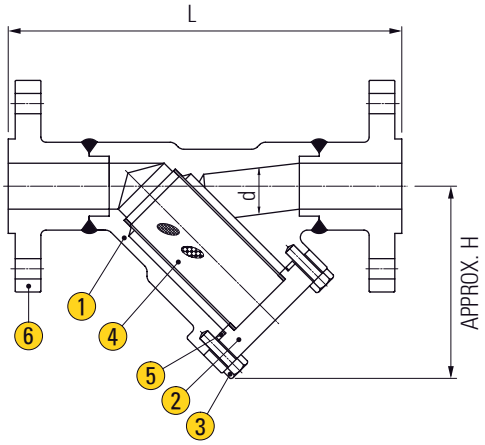

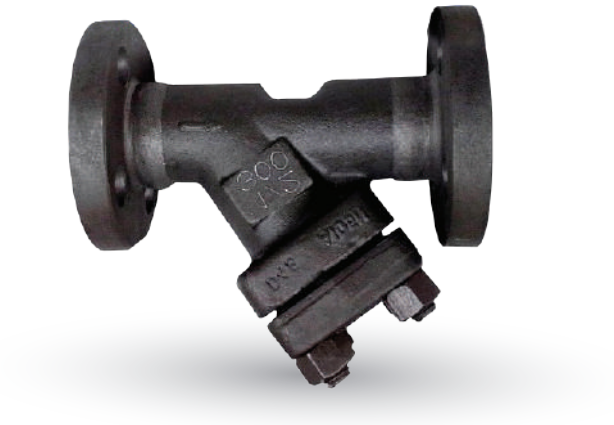

FIG GD-YST

APPLICATION

Suitable for water, steam, oil, gases and non-abrasive media
(Refer to corrosion resistance table for valve materials selection).

SPECIFICATION

Face To Face Dimension	ASME B16.10
Preasure Rating	Class 150, 300, 600 and 1500
End To End Dimension	ASME B16.10
Flange End Dimension	ASME B16.5
BW End Dimension	ASME B16.25

MATERIAL

	Parts	Material		
1	Body	A105 (1)	F304	F316
2	Cover	A105 (1)	F304	F316
3	Cover Bolt	A193-B7	A193-B8	A193-B8
4	Screen	SUS304	SUS304	SUS316
5	Gasket	SUS304 + Graphite	SUS304 + Graphite	SUS316 + Graphite
6	Flange	A105	F304	F316

Note : (1) A105 also available with 0.25% Maximum Carbon.

CLASS 150 - 300 - 600

Unit : mm / inch

Class	Valve Size		Center to Top, Open		End to End		End to Hub (Dia)		Approx. Weight	
			H		L		d			
	DN	in	mm	in	mm	in	mm	in	kg	lb
150 / 300 (10K,20K,30K)	15	1/2	88	3.46	178	7.01	13	0.51	1.7	3.8
	20	3/4	88	3.46	187	7.36	18	0.71	2.4	5.3
	25	1	105	4.13	209	8.22	23	0.90	3.8	8.4
	32	1-1/4	123	4.48	241	9.49	29	1.14	5.0	11.0
	40	1-1/2	123	4.48	241	9.49	35	1.37	7.7	17.0
	50	2	142	5.59	278	10.94	38	1.50	11.4	25.1
600 (40K)	15	1/2	88	3.46	180	7.09	13	0.51	2.5	5.5
	20	3/4	88	3.46	190	7.48	18	0.71	3.9	8.6
	25	1	105	4.13	216	8.50	23	0.90	5.7	12.6
	32	1-1/4	123	4.84	260	10.24	29	1.14	8.0	17.6
	40	1-1/2	123	4.84	260	10.24	35	1.37	11.5	25.4
	50	2	142	5.59	292	11.50	38	1.50	13.8	30.4

* Other materials also available on application

*Specification given are subject to changed without further notice.

Y-STRAINER SCREWED END

CAST IRON / BRASS / STAINLESS STEEL

MERCOID
Tel: 03-5569 2933 (6 Lines) Fax: 03-5569 2588, 5569 2788
Email: mercoid@mercoid.com.my, valmicro@valmicro.com.my
http://www.mercoid.com.my

MARVIN CONTROLS, INC.

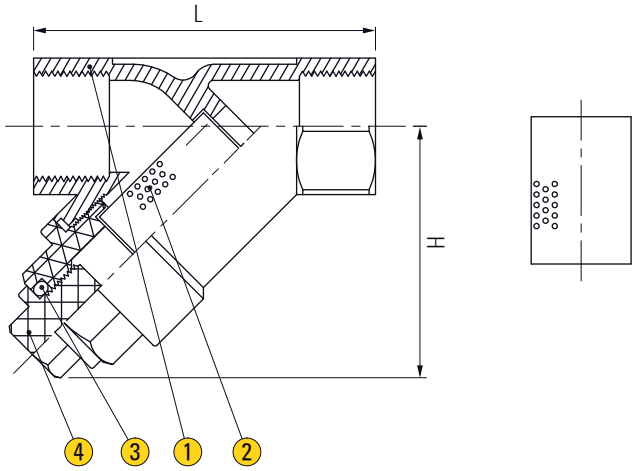

APPLICATION

Suitable for water, oil, gases and others non-abrasive media
(Refer to corrosion resistance table for valve materials selection).

SPECIFICATION

End Connection	Screwed End BSPT female thread
Pressure Rating	800 PSI W.O.G for SUS316 strainer 10kgf/cm² for cast iron strainer 16 Bar for brass strainer
Working Temperature	Up to 150ºC
Screen	Perforated screen
Mesh Size	20 / 40

MATERIAL

	Parts	FIG 13Y6 / 13Y7	FIG 13Y1	FIG 13Y8
1	Body	SUS304 / 316	Cast Iron	Brass
2	Screen	SUS304 / 316	SUS304	SUS304
3	Gasket	PTFE	Graphite	PTFE
4	Plug	SUS304 / 316	Cast Iron	Brass

DIMENSIONS

Unit : mm

Size	DN8	DN10	DN15	DN20	DN25	DN32	DN40	DN50	DN65	DN80	DN100
	1/4"	3/8"	1/2"	3/4"	1"	1-1/4"	1-1/2"	2"	2-1/2"	3"	4"
L	65.0	65.0	65.0	80.0	90.0	105.0	120.0	140.0	180.0	200.0	240.0
H	51.0	51.0	51.0	60.0	72.0	77.0	87.0	103.0	124.0	143.0	205.0

*Specification given are subject to changed without further notice.

MERCOID
Tel: 03-5569 2933 (6 Lines) Fax: 03-5569 2588, 5569 2788
Email: mercoid@mercoid.com.my, valmicro@valmicro.com.my
http://www.mercoid.com.my

STRAINER SIMPLEX BUCKET TYPE

CARBON STEEL / STAINLESS STEEL

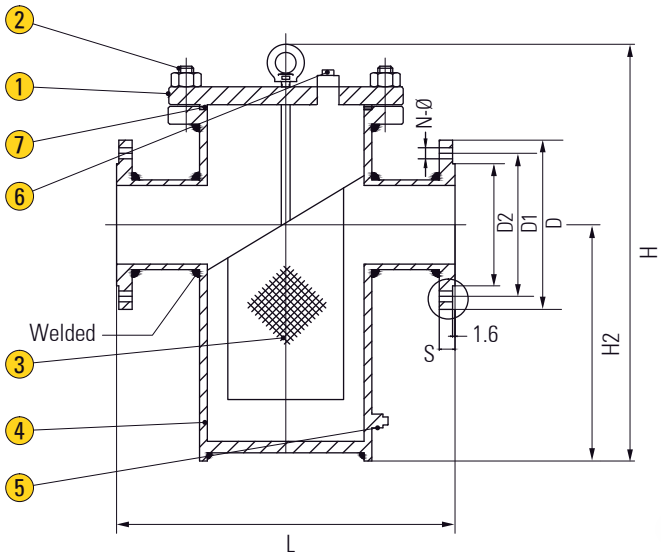

APPLICATION

Suitable for water, steam, oil, gases and non-abrasive media
(Refer to corrosion resistance table for valve materials selection).

SPECIFICATION

End Connection	Flange end to ANSI 150, ANSI 300, DIN PN16, PN40, JIS 10K, JIS 20K
Pressure Rating	Class 150 and 300
Screen Size	40 Mesh, 60 Mesh and 80 Mesh

MATERIAL

	Parts	Material		
1	Bonnet	CS	SS304	SS316
2	Bolting	B7 / 2H	A4-70	A4-70
3	Screen	SS304	SS304	SS316
4	Body	CS	SS304	SS316
5	Drain	CS	SS304	SS316
6	Vent	CS	SS304	SS316
7	Gasket	Graphite	Graphite	Graphite

DIMENSIONS

Unit : mm

Size / DN	L	Ø	H	H1	D	D1	D2	S	N-Ø
50	280	133	300	180	165	125	102	18	4-18
65	330	133	350	220	185	145	122	18	8-18
80	340	159	400	260	200	160	138	20	8-18
100	420	219	470	310	220	180	158	20	8-18
125	500	273	540	380	250	210	188	22	8-18
150	500	273	620	430	285	240	212	22	8-22
200	560	325	780	530	340	295	268	24	8-22
250	660	377	930	640	395	350	320	26	12-22
300	750	478	1120	800	445	400	370	26	12-22
350	800	530	1300	930	505	460	430	26	16-22

*Specification given are subject to changed without further notice.

STRAINER DUPLEX BUCKET TYPE

CARBON STEEL / STAINLESS STEEL

MERCOID

Tel: 03-5569 2933 (6 Lines) Fax: 03-5569 2588, 5569 2788
Email: mercoid@mercoid.com.my, valmicro@valmicro.com.my
http://www.mercoid.com.my

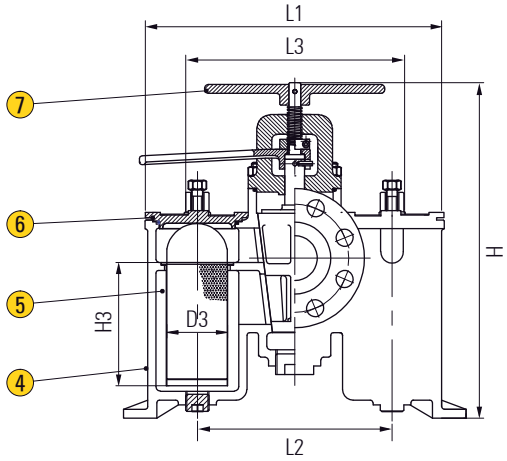

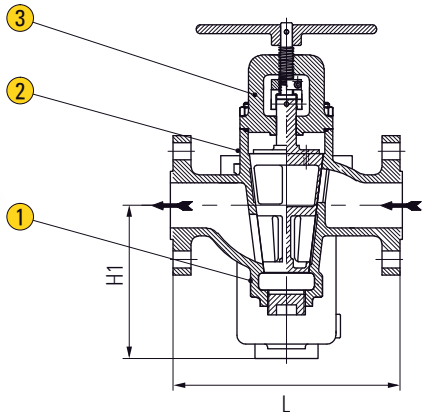

APPLICATION

Suitable for water, steam, oil, gases and non-abrasive media (Refer to corrosion resistance table for valve materials selection).

SPECIFICATION

End Connection	Flange end to ANSI 150, ANSI 300, DIN PN16, PN40, JIS 10K, JIS 20K
Pressure Rating	Class 150 and 300
Screen Size	40 Mesh, 60 Mesh and 80 Mesh

MATERIAL

	Parts	Material			
1	Plug Valve Body	A126	WCB	FC8	FC8M
2	Plug	A126	WCB	FC8	FC8M
3	Plug Valve Bonnet	A126	WCB	FC8	FC8M
4	Strainer Body	A126	WCB	FC8	FC8M
5	Mesh	304	304	304	316
6	Strainer Bonnet	A126	WCB	FC8	FC8M
7	Handle	DCI	DCI	DCI	DCI

JIS 10K / ANSI 150LB/DIN PN16

Unit : mm

Inch	L	L1	L2	L3	H	H1	D3	H3
3/4″	205	270	180	190	285	115	40	70
1″	205	270	180	190	285	115	68	100
1-1/2″	240	380	230	260	465	155	78	130
2″	272	420	255	305	550	280	95	200
2-1/2″	277	430	270	320	580	294	95	200
3″	315	470	305	345	640	320	95	200
4″	400	520	350	430	880	370	107	350
5″	460	690	450	475	1000	410	140	380
6″	500	750	480	510	1060	430	164	400
8″	670	1030	610	955	1350	633	225	600
10″	950	1250	970	1220	1400	650	280	600
12″	1010	1480	1020	1100	1785	700	320	765

*Specification given are subject to changed without further notice.

DIAPHRAGM VALVE | PLUG VLAVE

Diaphragm Valve

Diaphragm valve get their name from a flexible disc which comes into contact with a seat at the top of the valve body to form a seal. A diaphragm is a flexible, pressure responsive element that transmits force to open, close or control a valve. Diaphragm valve are related to pinch valve, but use an elastomeric diaphragm, instead of an elastomeric liner in the valve body, to separate the flow stream from the closure element.

Diaphragm valve use a flexible diaphragm connected to a compressor by a stud which is molded into the diaphragm. Instead of pinching the liner closed to provide shut-off, the diaphragm is pushed into contact with the bottom of the valve body to provide shut-off. Manual diaphragm valve are ideal for flow control by offering a variable and precise opening for controlling pressure drop through the valve. The handwheel is turned until the desired amount of media is flowing through the system. For start and stop applications, the handwheel is turned until the compressor either pushes the diaphragm against the bottom of the valve body to stop flow or lifts off the bottom until flow is able to pass through.

Plug Valve

A plug valve is a quarter-turn rotational motion valve that use a tapered or cylindrical plug to stop or start flow. In the open position, the plug-passage is in one line with the inlet and outlet ports of the valve body. If the plug 90° is rotated from the open position, the solid part of the plug blocks the port and stops flow. Plug valve are similar to ball valve in operation.

DIAPHRAGM VALVE
WEIR / STRAIGHT THROUGH TYPE
CAST IRON / CARBON STEEL / STAINLESS STEEL

MERCOID
Tel: 03-5569 2933 (6 Lines) Fax: 03-5569 2588, 5569 2788
Email: mercoid@mercoid.com.my, valmicro@valmicro.com.my
http://www.mercoid.com.my

S2K Type
(Type A)

G2K Type
(Type KB)

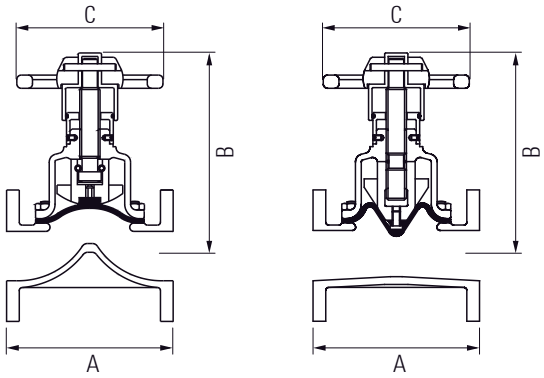

'S2K' Type
(Weir Type)

'G2K' Type
(Straight Through Type)

APPLICATION
Suitable for water, steam, oil, gases, abrasive and non-abrasive media
(Refer to corrosion resistance table for valve materials selection).

SPECIFICATION

Face to Face Dimension	Series 1 according to EN 558-1
End Connection	Flange end to ANSI 150, ANSI 300, DIN PN16, PN40, JIS 10K, JIS 20K
Pressure Rating	DIN PN16, DIN PN40, Class 150 and 300
Perforated Screen Diameter	1mm for DN15 to DN350 1.25mm for DN100 to DN300 1.6mm for DN100 to DN300
Mesh Size	20 / 40 / 60 / 80 / 100

VALVE PARTS - Rising Handwheel

Series 'S2K' (PFA Lined)

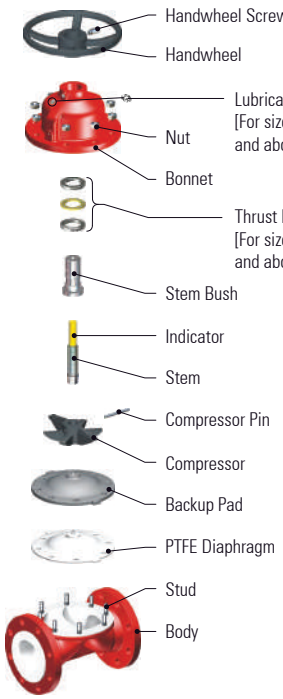

Series 'S2K' **Series 'G2K'**

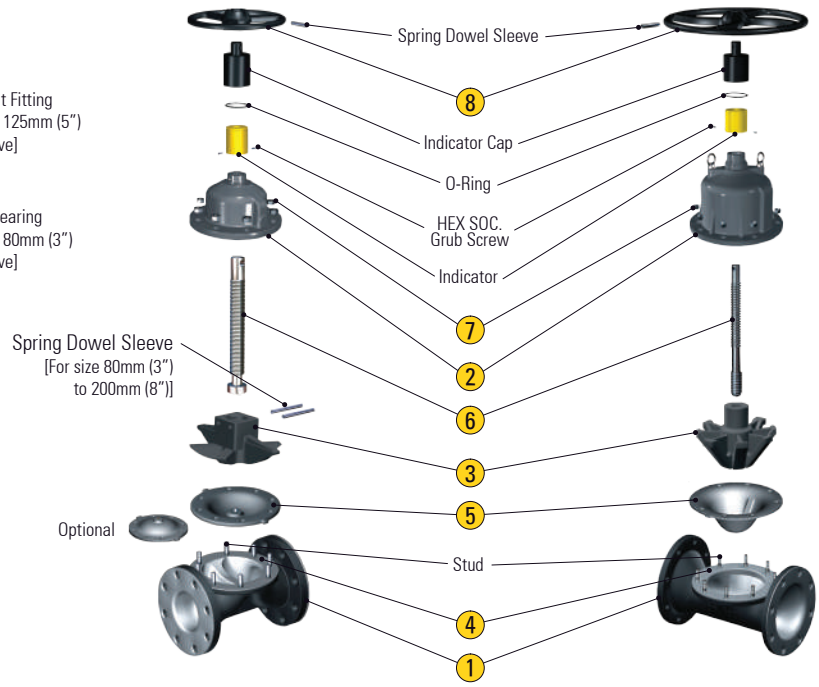

Diaphragms - Series 'S2K' & 'G2K'

Series 'S2K' Close Type

Series 'S2K' Open Type

Series 'S2K' PTFE with Elastomer Pad

Series 'G2K' Close Type

*Specification given are subject to changed without further notice.

MATERIAL

Parts	Material
1 Body 2 Bonnet 3 Compressor	Cast Iron ASTM A216 Class B / EN-1561 No.EN-JL 1040 / S G Iron EN-1563 No.EN-JS 1024 / ASTM A395 Gr. 60-40-18 / 30% Cr. Cast Steel ASTM A743 Gr. CC50 / ASTM A216 Gr. WCB / Stainless Steel ASTM A351 Gr. CF8 / CF8M
4 Body Lining	Ebonite / Natural / Butyl / Neoprene / EPDM / Nitrile, other Elastomer & even PFA, PTFE, PP etc.
5 Diaphragm	Natural / Butyl / Neoprene / EPDM / Nitrile / Hypalon / Viton / Silicon / PTFE ect.
6 Stem	Steel ASTM A276 Type 410
7 Connecting Studs / Nuts	Steel Gr. 4.6 / 4
8 Handwheel	Cast Iron ASTM A126 Class B / EN-1561 No.EN-JL 1040
Surface Protection for Cast Iron and Cast Carbon Steel Valves	Prime Coat : Chlorine free with modified alkyd resin unobjectionable in physiological and toxicological respects. Additional external coating : Black stoving enamel

DIMENSIONS

Unit : mm (inch)

Size	A					Series 'S2K' Weir Type					Series 'G2K' Straight Through Type			
	BS			DIN	MSS*	B	C	Approx.Wt, Kg (LB)			B	C	Approx.Wt, Kg (LB)	
	Unlined	Rubber Lined	PFA* Lined	Unlined & Lined	SP-88 PFA Lined			BS	DIN	MSS			BS	DIN
15 (1/2)	108 (4.3)	114 (4.5)	114 (4.5)	130 (5.1)	108 (5.1)	105 (4.1)	80 (3.1)	2.5 (5.5)	2.8 (6.2)	2.5 (5.5)	105 (4.1)	80 (3.1)	2.4 (3.1)	2.6 (5.7)
20 (3/4)	117 (4.6)	123 (4.8)	123 (4.8)	150 (5.9)	149 (5.9)	115 (4.5)	80 (3.1)	2.6 (5.7)	3.2 (7.0)	3.0 (6.6)	115 (4.5)	80 (3.1)	2.8 (6.2)	3.0 (6.6)
25 (1)	127 (5.0)	133 (5.2)	133 (5.2)	160 (6.3)	149 (5.9)	132 (5.2)	120 (4.7)	3.5 (7.7)	4.2 (9.3)	4.0 (8.8)	135 (5.3)	120 (4.7)	4.2 (9.3)	4.6 (10.1)
32 (1-1/4)	146 (5.7)	152 (6.0)	152 (6.0)	180 (7.1)	152 (6.0)	140 (5.5)	120 (4.7)	4.5 (9.9)	5.5 (12.1)	5.0 (11.0)	135 (5.3)	120 (4.7)	4.5 (9.9)	5.5 (12.1)
40 (1-1/2)	159 (6.3)	165 (6.5)	165 (6.5)	200 (7.9)	176 (6.9)	180 (7.1)	150 (5.9)	7.0 (15.4)	8.0 (17.6)	7.5 (16.5)	135 (5.3)	150 (5.9)	5.5(12.1)	6.0 (13.2)
50 (2)	190 (7.5)	196 (7.7)	196 (7.7)	230 (9.1)	202 (7.9)	210 (8.3)	150 (5.9)	10 (22)	15 (33)	11 (24)	175 (6.9)	150 (5.9)	10 (22)	11 (24)
65 (2-1/2)	216 (8.5)	222 (8.7)	222 (8.7)	290 (11.4)	222 (8.7)	235 (9.3)	180 (7.1)	15 (33)	19 (42)	16 (35)	200 (7.9)	180 (7.1)	16 (35)	18 (39)
80 (3)	254 (10.0)	260 (10.2)	260 (10.2)	310 (12.2)	264 (10.4)	305 (12.0)	250 (9.8)	22 (49)	26 (57)	23 (51)	260 (10.2)	250 (9.8)	25 (55)	28 (62)
100 (4)	305 (12.0)	313 (12.3)	311 (12.2)	350 (13.8)	329 (12.9)	340 (13.4)	250 (9.8)	38 (84)	43 (95)	38 (84)	275 (10.8)	250 (9.8)	33 (73)	37 (82)
125 (5)	356 (14.0)	364 (14.3)	362 (14.2)	400 (15.7)	416 (16.4)	420 (16.5)	315 (12.4)	63 (139)	69 (152)	71 (156)	340 (13.4)	315 (12.4)	57 (126)	64 (141)
150 (6)	406 (15.9)	414 (16.3)	412 (16.2)	480 (18.9)	416 (16.4)	490 (19.3)	360 (14.2)	92 (203)	107 (236)	94 (207)	440 (17.3)	360 (14.2)	67 (148)	82 (181)
200 (8)	521 (20.5)	529 (20.8)	527 (20.8)	600 (23.6)	530 (20.9)	645 (25.4)	470 (18.5)	164 (361)	186 (410)	167 (368)	495 (19.5)	470 (18.5)	116 (256)	136 (300)

* Series 'S2K' only

DIAPHRAGMS - TYPICAL SELECTION AND APPLICATION

Grade	Material	Application	Temperature Range °C (°F)	Hardness In Shore - A	UTS Kg/cm² (PSI)	Colour Code
A	Natural Rubber	Mildy Acid Resistant	-30 to 80 (-22 to 176)	65 - 75	170 (2418)	White
AA	Natural Rubber	Abrasion Resistant	-30 to 80 (-22 to 176)	60 - 70	150 (2134)	White
AS	Natural Rubber	Highly Abrasion Resistant	-30 to 80 (-22 to 176)	45 - 55	150 (2134)	White
WA	White Natural Rubber	Food & Pharmaceuticals	-10 to 80 (14 to 176)	55 - 65	100 (1422)	White
N	Neoprene Rubber	Diluted Acid Resistant	-25 to 95 (-13 to 203)	60 - 70	120 (1707)	Red
NWT	Neoprene Rubber	Water Treatment	-25 to 95 (-13 to 203)	60 - 70	120 (1707)	Red
NCMS	Neoprene Rubber	Caustic Soda	-25 to 95 (-13 to 203)	60 - 70	120 (1707)	Red
B	Butyl Rubber	Steam Sterilisation	-25 to 120 (-13 to 248)	60 - 70	100 (1422)	Blue
WB	White Butyl Rubber	Food & Pharmaceuticals	-25 to 105 (-13 to 221)	55 - 65	80 (1138)	Blue
R	Nitrile Rubber	Oil & Fats	-10 to 90 (14 to 194)	65 - 75	120 (1707)	Yellow
H	Hypalon Rubber	Acid Resistant	-15 to 100 (5 to 212)	60 - 70	80 (1138)	Green
EP	Ethylene Propylene	Radio Active Materials	-30 to 150 (-22 to 302)	65 - 75	80 (1138)	Orange
V	Viton Rubber	Aromatics Chlorine	-5 to 150 (23 to 302)	70 - 80	70 (996)	Pink
S	Silicon Rubber	High Temperatures	-100 to 250 (-148 to 482)	55 - 65	70 (996)	Black
T	PTFE	All Chemicals And Food	-30 to 175 (-22 to 347)	-	-	-

TECHNICAL DATA FOR FLUOROPOLYMER RESIN

Resin	Technical Name	Trade Name	Temperature Range °C (°F)	Melting PT, °C (°F)
PTFE	Poly Tetra Fluoro Ethylene	Teflon	-50 to 260 (-58 to 500)	327 (621)
PFA	Per Fluoro Alkoxy	Teflon	-50 to 260 (-58 to 500)	310 (590)
ETFE	Ethylene Tetra Fluoro Ethylene	Tefzel	-50 to 180 (-58 to 356)	240 (464)
FEP	Fluorinated Ethylene Proplyene	Teflon	-50 to 200 (-58 to 392)	265 (509)
ECTFE	Ethylene Chloro Trifluoro Ethylene	Halar	-50 to 170 (-58 to 338)	240 (464)
PVDF	Poly Vinylidene Fluoride	Kynar	-50 to 140 (-58 to 284)	160 (320)
PP	Poly Propylene	-	-50 to 120 (-58 to 248)	150 (302)

*Specification given are subject to changed without further notice.

PLUG VALVE GEAR / LEVER TYPE

CAST IRON / CARBON STEEL / STAINLESS STEEL

MERCOID
Tel: 03-5569 2933 (6 Lines) Fax: 03-5569 2588, 5569 2788
Email: mercoid@mercoid.com.my, valmicro@valmicro.com.my
http://www.mercoid.com.my

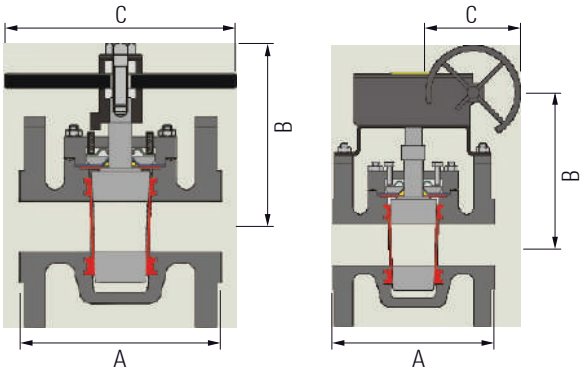

Lever Type Gear Type

APPLICATION

Suitable for water, steam, oil, gases, abrasive and non-abrasive media (Refer to corrosion resistance table for valve materials selection).

SPECIFICATION

Face to Face Dimension	ASME B16.10
Pressure Rating	Class 150 and 300
Flanged End Dimension	ASME B16.5
BW End Dimension	ASME B16.25
Test and Inspection	API 598
Pressure-Temperature Rating	ASME 16.34

VALVE PARTS

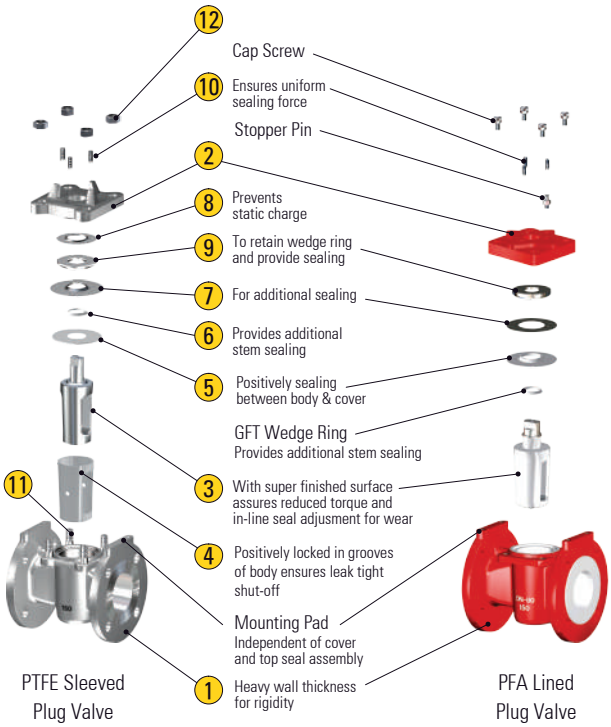

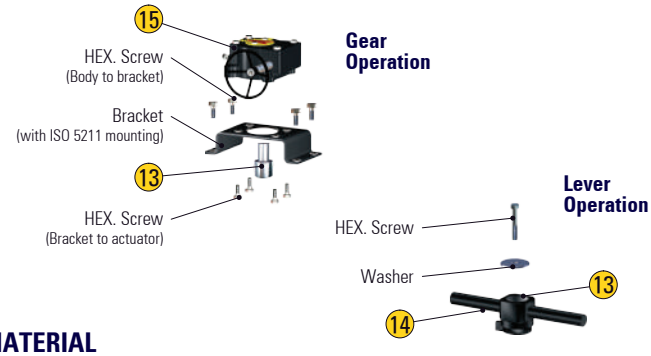

MATERIAL

Parts		Material
1 / 2	Body & Cover	Ductile Iron ASTM A395 / Steel ASTM A216 Gr. WCB / ASTM A351 Gr. CF8 / CF8M / CN7M
3	Plug	Steel ASTM A217 Gr. CA15 / ASTM A351 Gr. CF8 / CF8M / CN7M
4 / 5	Sleeve / Diaphragm	PTFE / CFT
6	Wedge Ring	PTFE / Grafoil
7 / 8	Metal Diaphragm / Static Eliminator	ASTM A240 Type 304
9	Thrust Collar	ASTM A351 Gr. CF8
10	Adjusting Screws	ASTM A276 Type 304
11 / 12	Studs / Nuts	ASTM A193 Gr. B8 / ASTM A194 Gr. 8
13 / 14	Adapter / Lever	Steel - Powder coated
15	Gear Unit	Housing in Cast Iron, Gear in S. G. Iron and Worm in ENB

DIMENSIONS

Size	A			B	C	Port Area	% Port	Approx.Wt, Kg (LB)		
	Class 150	Class 300	DIN			IN mm² (inch²)	Open	Class 150	Class 300	DIN
15 (1/2)	108 (4.3)	140 (5.5)	130 (5.1)	95 (3.7)	225 (8.9)	120 (0.19)	92	2.0 (4.5)	3.5 (8)	2.6 (6)
20 (3/4)	117 (4.6)	152 (6.0)	150 (5.9)	100 (3.9)	225 (8.9)	240 (0.37)	86	2.5 (5.5)	5 (11)	3.5 (8)
25 (1)	140 (5.5)	165 (6.5)	160 (6.3)	110 (4.3)	225 (8.9)	390 (0.60)	80	4.5 (10)	6.5 (14)	5.7 (13)
40 (1-1/2)	165 (6.5)	190 (7.5)	200 (7.9)	120 (4.7)	325 (12.8)	750 (1.16)	66	7.5 (17)	11 (24)	9.6 (21)
50 (2)	178 (7.0)	216 (8.5)	230 (9.1)	141 (5.6)	450 (17.7)	1450 (2.25)	74	12 (27)	16 (35)	15 (33)
65 (2-1/2)	190 (7.5)	241 (9.5)	290 (11.4)	145 (5.7)	450 (17.7)	2080 (3.22)	66	15 (33)	19 (42)	22 (49)
80 (3)	203 (8.0)	283 (11.1)	310 (12.2)	160 (6.3)	450 (17.7)	2540 (3.94)	53	18 (40)	22 (49)	24 (53)
100 (4)	229 (9.0)	305 (12.0)	350 (13.8)	195 (7.7)	750 (29.5)	4470 (6.93)	57	30 (66)	44 (97)	38 (84)
125 (5)	254 (10.0)	381 (15.0)	400 (15.7)	215 (8.5)	750 (29.5)	7305 (11.32)	58	44 (97)	78 (172)	78 (172)
150 (6)	267 (10.5)	403 (15.9)	450 (17.7)	250 (9.8)	800 (33.5)	10010 (15.52)	55	60 (132)	91 (212)	90 (198)
200 (8)	292 (11.5)	419 (16.5)	600 (23.6)	280 (11.0)	900 (35.4)	15800 (24.50)	49	96 (212)	148 (326)	166 (366)
250 (10)	330 (13.0)	457 (18.0)	730 (28.7)	340 (13.4)	900 (35.4)	23820 (36.92)	47	142 (313)	210 (463)	270 (595)
300 (12)	356 (14.0)	502 (19.8)	850 (33.5)	390 (15.4)	900 (35.4)	31220 (48.40)	43	195 (430)	280 (617)	395 (870)
350 (14)	381 (15.0)	-	-	450 (17.7)	900 (35.4)	38180 (59.18)	43	270 (595)	-	-
400 (16)	762(30.0)	-	-	595 (23.4)	900 (35.4)	74458 (115.41)	61	560 (1235)	-	-
450 (18)	864 (34.0)	-	-	650 (25.6)	900 (35.4)	97938 (151.80)	65	950 (2094)	-	-

*Specification given are subject to changed without further notice.

PIPELINE ANCILLARIES

SAFETY VALVE | PRESSURE REDUCING VALVE (PRV) | EXPANSION JOINT | STEAM TRAP | BLOW DOWN VALVE

Safety Valve
A safety valve is a safety device designed to protect a pressurized vessel or system during an overpressure event.
An overpressure event refers to any condition which would cause pressure in a vessel or system to increase beyond the specified design pressure or maximum allowable working pressure (MAWP).

Pressure-reducing Valve (PRV)
Pressure-reducing valve provide a steady pressure into a part of the system that operates at a pressure lower that normal system pressure. A reducing valve can normally be set for any desired downstream pressure within its design limits. Once the valve is set, the reduced pressure will be maintained regardless of changes in the supply pressure and system load variations.

Expansion Joint
Expansion joints are used in piping systems to absorb thermal expansion or terminal movement where the use of expansion loops is undesirable or impractical. Expansion joints are available in many different shapes and materials.

Steam Trap
A steam trap is a device used to discharge condensates and non-condensable gases with a negligible consumption or loss of live steam. Most steam trap are nothing more than automatic valve. They open, close or modulate automatically. The three important functions of steam trap are:
1. Discharge condensate as soon as it is formed (unless it is desirable to use the sensible heat of the liquid condensate)
2. Have a negligible steam consumption (i.e. being energy efficient)
3. Have the capability of discharging air and other non-condensable gases.

Blow Down Valve
Boiler blowdown is water intentionally wasted from a boiler to avoid concentration of impurities during continuing evaporation of steam. The water is blown out of the boiler with some force by steam pressure within the boiler.

SAFETY VALVE PROPORTIONAL TYPE

CAST IRON / CARBON STEEL / STAINLESS STEEL

MERCOID
Tel: 03-5569 2933 (6 Lines) Fax: 03-5569 2588, 5569 2788
Email: mercoid@mercoid.com.my, valmicro@valmicro.com.my
http://www.mercoid.com.my

VARIMEX Valves® CO. LTD.

FIG 2501

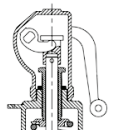

Tight Cap H4 with lifting lever

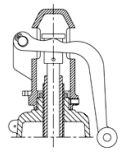

Open Cap H3 with disc lifting lever

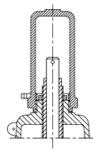

Tight Cap H2

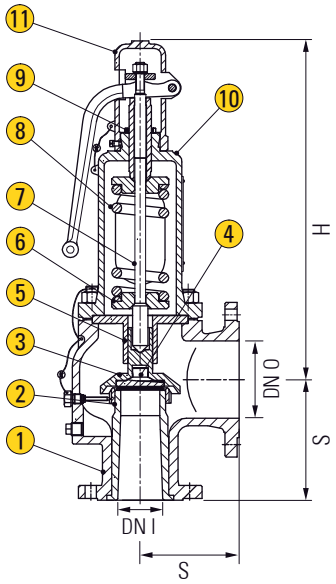

APPLICATION

Suitable for water, steam, oil, gases and others non-abrasive media
(Refer to corrosion resistance table for valve materials selection).

SPECIFICATION

End Connection	Flange end to ANSI 150, ANSI 300, DIN PN16, PN40, JIS 10K, JIS 20K
Pressure Rating	DIN PN16, DIN PN40, Class 150 and Class 300
Type-test Approved Acc. to	DIN EN ISO 4126, AD2000-A2, TRD 421, ASME I, ASME IIIV and API 526

MATERIAL

Parts	Cast Iron Body	Carbon Steel Body	Stainless Steel Body
1 Valve Body	Cast Iron G250	Carbon Steel ASTM A216 WCB - EN 1.0619	Stainless Steel ASTM A351 CF8M - EN 1.4408
2 Seat	Stainless Steel ASTM 316 - EN 1.4401	Stainless Steel ASTM 316 - EN 1.4401	Stainless Steel ASTM 316 - EN 1.4401
3 Disc	Stainless Steel ASTM 420 - EN 1.4028	Stainless Steel ASTM 420 - EN 1.4028	Stainless Steel ASTM 316 - EN 1.4401
4 Ball	Stainless Steel ASTM 420 - EN 1.4028	Stainless Steel ASTM 420 - EN 1.4028	Stainless Steel ASTM 316 - EN 1.4401
5 Complete Guide	Cast Iron GS450/10 with Bush ASTM 430F Tenifer	Cast Iron GS450/10 with Bush ASTM 430F Tenifer or Stainless Steel ASTM 316 - EN 1.4401	Stainless Steel ASTM 316 - EN 1.4401
6 Spring Plate	AVP Steel	AVP Steel	Stainless Steel ASTM 316 - EN 1.4401
7 Spindle	Stainless Steel ASTM 430F - EN 1.4104	Stainless Steel ASTM 430F - EN 1.4104	Stainless Steel ASTM 316 - EN 1.4401
8 Spring	Carbon Steel Alloy Steel	Carbon Steel Alloy Steel	Stainless Steel ASTM 316 S42
9 Pressure Adjusting Screw	Brass OT58 / AVP Steel	Brass OT58 / AVP Steel	Stainless Steel ASTM 316 - EN 1.4401 with Bush in PTFE
10 Bonnet	Cast Iron GS450/10	Cast Iron GS450/10 or Carbon Steel ASTM A216 WCB - EN 1.0619	Stainless Steel ASTM A351 CF8M - EN 1.4408
11 Tight Cap H4 with Lifting Lever	Cast Iron GS450/10	Cast Iron GS450/10	Stainless Steel ASTM A351 CF8M - EN 1.4408

DIMENSIONS

Unit : mm

Size		EN Flange PN16 / PN25 / PN40	ANSI / ASME Flange CL150 / CL150	H	Actual Orifice Diameter	Actual Discharge Area	Disc Lift	Max Set Pressure Valve Body	
								Cast Iron	Cast Steel
DN I	DN O	S	S		mm	cm²	mm	barg	
15		90	85.1	223	12.5	1.23	2.3	16	40
20 x 20		95	89.7	223	18	2.54	3.1	16	40
20 x 25		100	96.3	223	18	2.54	3.1	16	40
25		100	96.3	223	18	2.54	3.1	16	40
32		105	102.9	223	18	2.54	3.1	16	40
40		115	114.5	223	23	4.15	3.5	16	40
50		125	124	273	29	6.61	3.8	16	40
65		145	145.2	330	37	10.75	4.0	16	37
80		155	154.8	375	46	16.62	5.1	16	35
100		175	174.8	435	60	28.27	7.1	16	30
125		200	197.8	545	74	43.00	8.5	16	25
150		225	222.4	645	92	66.48	11.4	16	16

*Specification given are subject to changed without further notice.

FLOW RATE TABLE

Unit : Kg/h

Set Pressure P	DN 15 - do 12.5			DN 20 - do 18			DN 25 - do 18			DN 32 - do 18			DN 40 - do 23			DN 50 - do 29		
	Water a 25ºC	Air a 25ºC	Sat. Steam	Water a 25ºC	Air a 25ºC	Sat. Steam	Water a 25ºC	Air a 25ºC	Sat. Steam	Water a 25ºC	Air a 25ºC	Sat. Steam	Water a 25ºC	Air a 25ºC	Sat. Steam	Water a 25ºC	Air a 25ºC	Sat. Steam
Bar	Kg/h	Kg/h	Kg/h	Kg/h	Kg/h	Kg/h	Kg/h	Kg/h	Kg/h	Kg/h	Kg/h	Kg/h	Kg/h	Kg/h	Kg/h	Kg/h	Kg/h	Kg/h
0.25	1.171	40	26	2.434	87	53	2.434	87	53	2.434	87	53	3.994	136	87	6.350	216	145
0.5	1.536	53	33	3.203	116	70	3.203	116	70	3.203	116	70	5.230	182	114	8.315	289	190
0.75	1.830	65	41	3.813	142	85	3.813	142	85	3.813	142	85	6.226	221	139	9.898	352	235
1	2.084	76	48	4.338	158	101	4.338	158	101	4.338	158	101	7.083	258	165	11.260	411	263
1.5	2.562	99	62	5.313	205	129	5.313	205	129	5.313	205	129	8.675	335	211	13.792	533	336
2	2.958	119	75	6.135	248	156	6.135	248	156	6.135	248	156	10.017	405	256	15.926	644	407
2.5	3.308	144	90	6.860	298	188	6.860	298	188	6.860	298	188	11.200	488	306	17.806	775	488
3	3.624	165	103	7.514	342	215	7.514	342	215	7.514	342	215	12.269	559	351	19.506	889	558
4	4.184	207	129	8.677	430	268	8.677	430	268	8.677	430	268	14.167	702	438	22.524	1.117	697
5	4.678	249	155	9.701	518	321	9.701	518	321	9.701	518	321	15.840	846	525	25.182	1.345	835
6	5.125	292	180	10.627	606	374	10.627	606	374	10.627	606	374	17.352	989	611	27.586	1.573	972
7	5.536	334	206	11.479	694	427	11.479	694	427	11.479	694	427	18.742	1.133	698	29.797	1.802	1.109
8	5.918	377	231	12.272	782	480	12.272	782	480	12.272	782	480	20.037	1.277	784	31.854	2.030	1.246
9	6.277	419	256	13.016	870	532	13.016	870	532	13.016	870	532	21.252	1.421	869	33.787	2.259	1.383
10	6.616	462	282	13.720	959	585	13.720	959	585	13.720	959	585	22.402	1.565	955	35.615	2.489	1.519
12	7.248	547	332	15.030	1.136	689	15.030	1.136	689	15.030	1.136	689	24.540	1.854	1.125	39.015	2.949	1.789
14	7.829	633	382	16.235	1.313	793	16.235	1.313	793	16.235	1.313	793	26.507	2.144	1.296	42.141	3.409	2.060
16	8.370	719	433	17.356	1.491	898	17.356	1.491	898	17.356	1.491	898	28.337	2.435	1.466	45.051	3.871	2.331
18	8.877	805	483	18.409	1.670	1.002	18.409	1.670	1.002	18.409	1.670	1.002	30.057	2.726	2.602	47.784	4.334	2.602
20	9.358	891	533	19.405	1.848	1.106	19.405	1.848	1.106	19.405	1.848	1.106	31.683	3.018	1.806	50.370	4.799	2.872
22	9.815	978	583	20.352	2.028	1.209	20.352	2.028	1.209	20.352	2.028	1.209	33.230	3.311	1.975	52.829	5.264	3.140
24	10.251	1.064	633	21.257	2.207	1.314	21.257	2.207	1.314	21.257	2.207	1.314	34.708	3.604	2.145	55.178	5.731	3.411
26	10.670	1.151	684	22.126	2.388	1.419	22.126	2.388	1.419	22.126	2.388	1.419	36.125	3.899	2.316	57.432	6.198	3.683
28	11.073	1.238	735	22.961	2.568	1.524	22.961	2.568	1.524	22.961	2.568	1.524	37.489	4.194	2.488	59.601	6.667	3.956
30	11.462	1.326	785	23.767	2.749	1.628	23.767	2.749	1.628	23.767	2.749	1.628	38.806	4.489	2.658	61.693	7.137	4.227
32	11.838	1.413	835	24.547	2.931	1.733	24.547	2.931	1.733	24.547	2.931	1.733	40.079	4.785	2.829	63.717	7.608	4.498
34	12.202	1.501	886	25.303	3.113	1.837	25.303	3.113	1.837	25.303	3.113	1.837	41.312	5.082	3.000	65.679	8.080	4.769
36	12.556	1.589	936	26.037	3.295	1.941	26.037	3.295	1.941	26.037	3.295	1.941	42.511	5.380	3.170	67.583	8.553	5.039
38	12.900	1.677	987	26.750	3.478	2.046	26.750	3.478	2.046	26.750	3.478	2.046	43.676	5.678	3.342	69.436	9.028	5.313
40	13.235	1.765	1.038	27.445	3.661	2.152	27.445	3.661	2.152	27.445	3.661	2.152	44.811	5.977	3.514	71.240	9.503	5.587

FLOW RATE TABLE

Unit : Kg/h

Set Pressure P	DN 65 - do 37			DN 80 - do 46			DN 100 - do 60			DN 125 - do 74			DN 150 - do 92		
	Water a 25ºC	Air a 25ºC	Sat. Steam	Water a 25ºC	Air a 25ºC	Sat. Steam	Water a 25ºC	Air a 25ºC	Sat. Steam	Water a 25ºC	Air a 25ºC	Sat. Steam	Water a 25ºC	Air a 25ºC	Sat. Steam
Bar	Kg/h	Kg/h	Kg/h	Kg/h	Kg/h	Kg/h	Kg/h	Kg/h	Kg/h	Kg/h	Kg/h	Kg/h	Kg/h	Kg/h	Kg/h
0.25	10.337	352	227	15.978	570	351	27.183	926	597	41.349	1408	909	63.912	2177	1405
0.5	13.536	471	296	20.923	762	457	35.597	1240	778	54.147	1964	1184	83.693	2915	1831
0,75	16.113	573	362	24.905	927	559	42.371	1508	952	64.452	2294	1448	99.621	3546	2239
1	18.330	670	429	28.333	1035	663	48.203	1762	1128	73.323	2861	1716	113.332	4143	2652
1.5	22.451	869	547	34.702	1343	845	59.039	2285	1439	89.805	3476	2189	138.808	5373	3383
2	25.925	1048	663	40.071	1621	1025	68.174	2758	1744	103.701	4195	2653	160.285	6845	4101
2.5	28.985	1262	794	44.801	1952	1227	76.222	3321	2089	115.942	5051	3177	179.207	7808	4911
3	31.752	1.448	908	49.078	2.238	1.404	83.498	3.808	2.389	127.010	5.793	3.634	196.313	8.954	5.618
4	36.665	1.818	1.134	56.671	2.811	1.753	96.416	4.783	2.983	146.660	7.275	4.538	226.687	11.245	7.015
5	40.993	2.189	1.359	63.361	3.384	2.101	107.798	5.758	3.575	163.973	8.759	5.438	253.447	13.539	8.405
6	44.906	2.561	1.583	69.409	3.959	2.447	118.088	6.735	4.163	179.625	10.245	6.333	277.638	15.836	9.788
7	48.504	2.933	1.806	74.971	4.534	2.792	127.550	7.714	4.750	194.019	11.733	7.225	299.886	18.136	11.168
8	51.854	3.305	2.029	80.148	5.109	3.136	136.358	8.693	5.335	207.416	13.223	8.116	320.594	20.439	12.545
9	54.999	3.678	2.251	85.010	5.686	3.479	144.631	9.674	5.920	219.999	14.715	9.005	340.043	22.745	13.919
10	57.975	4.052	2.473	89.609	6.263	3.822	152.455	10.656	6.503	231.901	16.209	9.892	358.439	25.053	15.290
12	63.509	4.800	2.913	98.163	7.419	4.503	167.008	12.623	7.662	254.038	19.202	11.655	392.655	29.679	18.014
14	68.598	5.550	3.354	106.030	8.579	5.184	180.391	14.596	8.820	274.395	22.202	13.416	424.120	34.317	20.737
16	73.336	6.302	3.794	113.352	9.741	5.864	192.848	16.573	9.978	293.344	25.210	15.177	453.408	38.966	23.459
18	77.785	7.056	4.235	120.229	10.906	6.547	204.548	18.556	11.138	311.141	28.226	16.943	480.917	43.627	26.188
20	81.993	7.812	4.676	126.734	12.075	7.227	215.615	20.543	12.296	327.975	31.249	18.704	506.936	48.300	28.911
22	85.996	8.569	5.112	132.921	13.246	7.901	226.141	22.535	13.443	343.986	34.279	20.449	531.684	52.984	31.607
24	89.821	9.329	5.553	138.832	14.419	8.583	236.199	24.532	14.603	359.285	37.317	22.213	555.331	57.679	34.334
26	93.490	10.090	5.995	144.503	15.596	9.267	245.846	26.534	15.767	373.960	40.362	23.983	578.012	62.386	37.070
28	97.020	10.853	6.439	149.959	16.776	9.953	255.129	28.541	16.934	388.080	43.415	25.759	599.837	67.104	39.814
30	100.426	11.618	6.880	155.224	17.958	10.635	264.086	30.553	18.094	401.705	46.474	27.523	620.897	71.834	42.542
32	103.720	12.385	7.322	160.316	19.143	11.318	272.750	32.569	19.256	414.883	49.541	29.290	641.265	76.574	45.273
34	106.913	13.154	7.764	165.251	20.331	12.000	281.146	34.590	20.417	427.655	52.616	31.057	661.007	81.326	48.003
36	110.014	13.924	8.203	170.044	21.522	12.680	289.300	36.616	21.573	440.058	55.697	32.815	680.177	86.089	50.721
38	113.030	14.696	8.648	174.705	22.715	13.368	297.230	38.646	22.743	452.121	58.785	34.595	698.822	90.862	53.472
40	115.967	15.470	9.095	179.245	23.911	14.058	304.955	40.681	23.917	463.870	61.881	36.381	716.983	95.647	56.232

Note 1) Flow rates have been calculated according to EN 4126-1 rules with overpressure 10% (0,1 bar if p<1 barg)
Note 2) Approximate intermediate values can be obtained by linear interpolation
Note 3) Flow rates given in this table are undemanding; Mercoid Control (M) Sdn Bhd will always check fluid mechanical sizing of each safety valve, and indicate calculated flow rate in every relevant document (Specification sheet in case of offer, inspection certificate in case of order, calculation sheet when applicable)

Diagram showing coefficient of discharge Kd trend vs. pb/po ratio (gaseous)

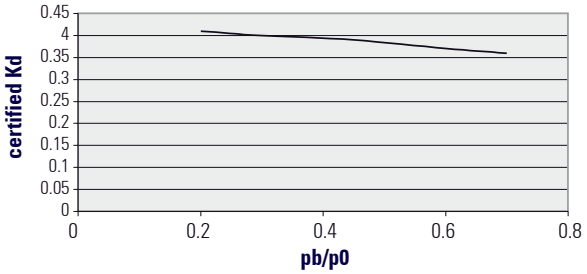

pb = backpressure (bar abs)
p0 = upstream relieving pressure (bar abs)

*Specification given are subject to changed without further notice.

SAFETY VALVE FULL LIFT TYPE

CAST IRON / CARBON STEEL / STAINLESS STEEL

MERCOID
Tel: 03-5569 2933 (6 Lines) Fax: 03-5569 2588, 5569 2788
Email: mercoid@mercoid.com.my, valmicro@valmicro.com.my
http://www.mercoid.com.my

VARIMEX Valves® CO. LTD.

FIG 630-*1-*2-*3

Note : *1 Class | *2 Material | *3 Connection

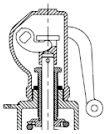

Tight Cap H4 with packed lifting lever

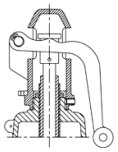

Open Cap H3 with plain lifting lever

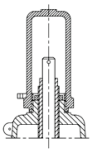

Tight Cap H2 without lifting lever

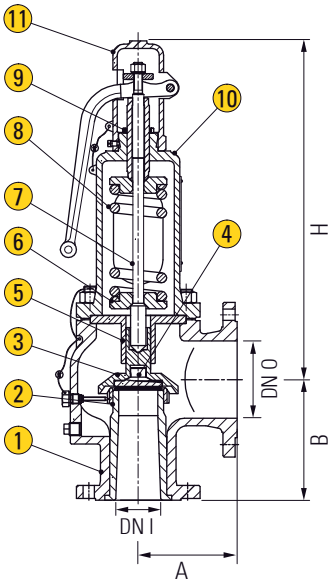

APPLICATION

Suitable for water, steam, oil, gases and others non-abrasive media
(Refer to corrosion resistance table for valve materials selection).

SPECIFICATION

End Connection	Flange end to ANSI 150, ANSI 300, DIN PN16, PN40, JIS 10K, JIS 20K
Pressure Rating	DIN PN16, DIN PN40, Class 150 and 300
Type-test Approved Acc. to	DIN EN ISO 4126, AD2000-A2, TRD 421, ASME I, ASME IIIV and API 526

MATERIAL

Parts	Cast Iron Body	Carbon Steel Body	Stainless Steel Body
1 Valve Body	Cast Iron G250	Carbon Steel ASTM A216 WCB - EN 1.0619	Stainless Steel ASTM A351 CF8M - EN 1.4408
2 Full Nozzle (Seat)	Stainless Steel ASTM 316 - EN 1.4401	Stainless Steel ASTM 316 - EN 1.4401	Stainless Steel ASTM 316 - EN 1.4401
3 Disc	Stainless Steel ASTM 420 - EN 1.4028	Stainless Steel ASTM 420 - EN 1.4028	Stainless Steel ASTM 316 - EN 1.4401
4 Ball	Stainless Steel ASTM 420 - EN 1.4028	Stainless Steel ASTM 420 - EN 1.4028	Stainless Steel ASTM 316 - EN 1.4401
5 Complete Guide	Cast Iron GS450/10 with Bush ASTM 430F Tenifer	Cast Iron GS450/10 with Bush ASTM 430F Tenifer or Stainless Steel ASTM 316 - EN 1.4401	Stainless Steel ASTM 316 - EN 1.4401
6 Spring Plate	AVP Steel	AVP Steel	Stainless Steel ASTM 316 - EN 1.4401
7 Spindle	Stainless Steel ASTM 430F - EN 1.4104	Stainless Steel ASTM 430F - EN 1.4104	Stainless Steel ASTM 316 - EN 1.4401
8 Spring	Carbon Steel Alloy Steel	Carbon Steel Alloy Steel	Stainless Steel ASTM 316 S42
9 Pressure Adjusting Screw	Brass OT58 / AVP Steel	Brass OT58 / AVP Steel	Stainless Steel ASTM 316 - EN 1.4401 with Bush in PTFE
10 Bonnet	Cast Iron GS450/10	Cast Iron GS450/10 or Carbon Steel ASTM A216 WCB - EN 1.0619	Stainless Steel ASTM A351 CF8M - EN 1.4408
11 Tight Cap H4 with Lifting Lever	Cast Iron GS450/10	Cast Iron GS450/10	Stainless Steel ASTM A351 CF8M - EN 1.4408

DIMENSIONS

Unit : mm

Size	EN Flange PN16 / PN25 / PN40		ANSI / ASME Flange CL150 / CL150 CL300 / CL150		H	Actual Orifice Diameter	Actual Discharge Area	Size	Disc Lift	Max Set Pressure
DN I	A	B	A	B		mm	cm²	DN O	mm	barg
20	95	85	94.5	82.9	215	18	2.54	40	5.5	40
25	100	105	99.5	104.5	265	23	4.15	40	6.9	40
32	110	115	109	116	330	29	6.61	50	7.5	40
40	115	140	117.2	142.6	375	37	10.75	65	10.2	40
50	120	150	121.3	151.2	420	46	16.62	80	13.5	40
65	136	172	139.8	175.4	525	60	28.27	100	17.0	40
80	173	197	157.8	201.6	600	74	43.00	125	21.5	40
100	188	220	179.4	227.7	655	92	66.48	150	27.6	40
125	198	246	202.6	254.9	665	98	75.43	200	29.4	30
150	216	288	223.2	296.5	780	125	122.72	250	37.5	30
200	345	350	349.9	357.3	1161	165	213.82	350	48	30
250	454	450	459.5	459.6	1161	200	314.16	400	58	20

*Specification given are subject to changed without further notice.

FLOW RATE TABLE

Unit : Kg/h

Set Pressure P	DN 20 - do 18mm			DN 25 - do 23mm			DN 32 - do 29mm			DN 40 - do 37mm			DN 50 - do 46mm			DN 65 - do 60mm		
	Water a 25ºC	Air a 25ºC	Sat. Steam	Water a 25ºC	Air a 25ºC	Sat. Steam	Water a 25ºC	Air a 25ºC	Sat. Steam	Water a 25ºC	Air a 25ºC	Sat. Steam	Water a 25ºC	Air a 25ºC	Sat. Steam	Water a 25ºC	Air a 25ºC	Sat. Steam
Bar	Kg/h	Kg/h	Kg/h	Kg/h	Kg/h	Kg/h	Kg/h	Kg/h	Kg/h	Kg/h	Kg/h	Kg/h	Kg/h	Kg/h	Kg/h	Kg/h	Kg/h	Kg/h
0.25	3.822	145	94	6.241	242	156	9.922	371	239	16.152	583	376	24.965	884	570	42.474	1.447	933
0.5	5.005	196	123	8.173	331	208	12.993	509	319	21.151	814	511	32.692	1.236	776	55.620	2.029	1.274
0.75	5.958	243	153	9.728	410	259	15.466	632	399	25.176	1.012	639	38.914	1.564	988	66.206	2.573	1.624
1	6.778	290	185	11.067	488	312	17.595	752	481	28.641	1.206	772	44.270	1.835	1.174	75.318	3.122	1.998
1.5	8.302	382	241	13.555	643	405	21.550	993	625	35.080	1.641	1.033	54.222	2.500	1.574	92.249	4.190	2.638
2	9.587	475	300	15.652	788	498	24.884	1.235	781	40.508	2.039	1.252	62.611	3.107	1.965	106.522	5.286	3.343
2.5	10.718	565	355	17.500	936	589	27.822	1.488	936	45.290	2.423	1.524	70.002	3.745	2.356	119.097	6.283	3.952
3	11.741	657	412	19.171	1.088	683	30.478	1.730	1.086	49.613	2.817	1.768	76.685	4.355	2.733	130.466	7.409	4.650
4	13.558	837	522	22.137	1.367	865	35.193	2.173	1.356	57.289	3.587	2.238	88.549	5.544	3.460	150.651	9.433	5.886
5	15.159	1.022	634	24.750	1.668	1.036	39.348	2.653	1.647	64.052	4.318	2.682	99.002	6.675	4.146	168.435	11.357	7.053
6	16.606	1.195	739	27.113	1.951	1.207	43.104	3.103	1.918	70.166	5.051	3.123	108.452	7.807	4.828	184.513	13.282	8.214
7	17.936	1.368	843	29.285	2.235	1.377	46.558	3.553	2.189	75.788	5.784	3.564	117.143	8.940	5.508	199.298	15.210	9.372
8	19.175	1.542	947	31.308	2.518	1.546	49.773	4.004	2.459	81.022	6.518	4.003	125.232	10.075	6.187	213.060	17.140	10.527
9	20.338	1.716	1.051	33.207	2.802	1.716	52.792	4.455	2.728	85.937	7.253	4.441	132.829	11.210	6.865	225.986	19.073	11.680
10	21.439	1.890	1.154	35.003	3.086	1.885	55.648	4.907	2.997	90.586	7.988	4.879	140.015	12.347	7.542	238.211	21.007	12.831
12	23.485	2.239	1.360	38.345	3.656	2.221	60.960	5.812	3.531	99.233	9.462	5.748	153.380	14.625	8.885	260.950	24.882	15.117
14	25.367	2.589	1.566	41.418	4.227	2.557	65.846	6.720	4.065	107.185	10.939	6.617	165.672	16.908	10.228	281.861	28.767	17.402
16	27.119	2.939	1.771	44.278	4.799	2.892	70.393	7.629	4.599	114.587	12.419	7.486	177.112	19.196	11.571	301.326	32.659	19.686
18	28.764	3.290	1.977	46.964	5.372	3.229	74.663	8.541	5.133	121.539	13.903	8.357	187.858	21.489	12.917	319.607	36.561	21.976
20	30.320	3.642	2.183	49.505	5.947	3.565	78.703	9.454	5.667	128.115	15.390	9.226	198.021	23.788	14.260	336.899	40.471	24.261
22	31.801	3.995	2.387	51.922	6.522	3.897	82.545	10.369	6.196	134.369	16.880	10.086	207.689	26.091	15.590	353.346	44.389	26.523
24	33.215	4.348	2.593	54.231	7.099	4.233	86.216	11.287	6.730	140.346	18.373	10.956	216.926	28.399	16.935	369.061	48.317	28.812
26	34.572	4.702	2.799	56.446	7.678	4.571	89.738	12.206	7.267	146.078	19.870	11.829	225.786	30.713	18.284	384.135	52.252	31.108
28	35.877	5.057	3.006	58.577	8.257	4.909	93.126	13.128	7.805	151.593	21.370	12.705	234.311	33.031	19.638	398.639	56.197	33.411
30	37.137	5.413	3.213	60.634	8.838	5.245	96.396	14.051	8.339	156.916	22.873	13.575	242.537	35.354	20.983	412.635	60.149	35.700
32	38.355	5.769	3.419	62.623	9.420	5.582	99.558	14.976	8.875	162.063	24.379	14.447	250.494	37.682	22.330	426.171	64.110	37.991
34	39.536	6.127	3.625	64.551	10.003	5.919	102.623	15.904	9.410	167.053	25.889	15.318	258.206	40.015	23.677	439.292	68.080	40.283
36	40.682	6.485	3.830	66.423	10.588	6.254	105.599	16.833	9.943	171.897	27.401	16.185	265.694	42.353	25.017	452.032	72.057	42.563
38	41.798	6.843	4.038	68.244	11.174	6.593	108.494	17.764	10.482	176.609	28.917	17.063	272.977	44.696	26.374	464.423	76.043	44.872
40	42.884	7.203	4.246	70.017	11.761	6.934	111.313	18.697	11.023	181.199	30.436	17.944	280.071	47.044	27.736	476.492	80.037	47.188

FLOW RATE TABLE

Unit : Kg/h

Set Pressure P	DN 80 - do 74mm			DN 100 - do 92mm			DN 125 - do 98mm			DN 150 - do 125mm			DN 200 - do 165mm			DN 250 - do 200mm		
	Water a 25ºC	Air a 25ºC	Sat. Steam	Water a 25ºC	Air a 25ºC	Sat. Steam	Water a 25ºC	Air a 25ºC	Sat. Steam	Water a 25ºC	Air a 25ºC	Sat. Steam	Water a 25ºC	Air a 25ºC	Sat. Steam	Water a 25ºC	Air a 25ºC	Sat. Steam
Bar	Kg/h	Kg/h	Kg/h	Kg/h	Kg/h	Kg/h	Kg/h	Kg/h	Kg/h	Kg/h	Kg/h	Kg/h	Kg/h	Kg/h	Kg/h	Kg/h	Kg/h	Kg/h
0.25	64.608	2.289	1.477	99.862	3.810	2.458	113.313	4.246	2.740	184.352	6.909	4.458	321.215	12.257	7.909	471.941	17.688	11.413
0.5	84.605	3.201	2.010	130.770	5.124	3.218	148.384	5.814	3.651	241.410	9.460	5.941	420.632	16.483	10.351	618.009	24.217	15.209
0.75	100.706	4.049	2.556	155.658	6.468	4.083	176.623	7.339	4.633	287.353	11.747	7.417	500.684	20.804	13.136	735.624	30.074	18.988
1	114.567	4.825	3.089	177.081	7.695	4.926	200.932	8.732	5.590	326.902	13.988	8.954	569.594	24.373	15.602	836.870	35.810	22.924
1.5	140.321	6.566	4.135	216.888	10.149	6.391	246.100	11.516	7.252	400.388	18.736	11.799	697.636	32.647	20.558	1.024.993	47.966	30.205
2	162.032	8.274	5.233	250.446	12.609	7.974	284.178	14.308	9.048	462.338	23.278	14.721	805.577	40.560	25.650	1.183.585	59.592	37.686
2.5	181.160	9.830	6.183	280.011	15.194	9.557	317.726	17.001	10.694	516.916	27.660	17.399	900.675	48.195	30.316	1.323.307	70.810	44.541
3	198.453	11.427	7.171	306.740	17.420	10.932	348.054	19.766	12.405	566.259	32.158	20.182	986.650	56.033	35.165	1.449.624	82.326	51.666
4	229.157	14.349	8.954	354.198	22.179	13.840	401.904	25.166	15.705	653.869	40.944	25.550	1.139.302	70.364	44.519	1.673.905	103.382	64.514
5	256.208	17.275	10.729	396.009	26.702	16.584	449.347	30.298	18.817	731.055	49.293	30.615	1.273.791	85.888	53.344	1.871.502	126.190	78.375
6	280.664	20.204	12.494	433.810	31.229	19.312	492.239	35.435	21.914	800.838	57.651	35.652	1.395.380	100.451	62.121	2.050.145	147.587	91.270
7	303.154	23.137	14.256	468.572	35.762	22.035	531.683	40.578	25.003	865.010	66.019	40.679	1.507.194	115.031	70.879	2.214.426	169.008	104.139
8	324.088	26.073	16.013	500.928	40.300	24.751	568.397	45.727	28.085	924.741	74.396	45.693	1.611.268	129.627	79.615	2.367.337	190.453	116.974
9	343.749	29.012	17.767	531.318	44.842	27.462	602.880	50.882	31.161	980.842	82.782	50.696	1.709.019	144.240	88.334	2.510.955	211.923	129.783
10	362.346	31.954	19.518	560.061	49.391	30.168	635.495	56.043	34.231	1.033.904	91.178	55.692	1.801.474	158.869	97.039	2.646.795	233.416	142.573
12	396.934	37.849	22.995	613.523	58.502	35.542	696.158	66.382	40.329	1.132.598	107.998	65.613	1.973.438	188.177	114.325	2.899.450	276.476	167.970
14	428.743	43.757	26.471	662.688	67.634	40.915	751.944	76.743	46.426	1.223.358	124.856	75.532	2.131.579	217.550	131.606	3.131.797	319.633	193.361
16	458.350	49.679	29.945	708.450	76.786	46.285	803.870	87.128	52.519	1.307.838	141.752	85.445	2.278.777	246.989	148.880	3.348.066	362.886	218.741
18	486.158	55.613	33.428	751.433	85.959	51.668	852.642	97.537	58.627	1.387.186	158.685	95.383	2.417.032	276.493	166.195	3.551.196	406.235	244.180
20	512.461	61.561	36.904	792.087	95.152	57.041	898.772	107.968	64.723	1.462.236	175.656	105.300	2.547.801	306.063	183.476	3.743.326	449.680	269.570
22	537.479	67.521	40.345	830.756	104.365	62.360	942.649	118.422	70.759	1.533.621	192.664	115.120	2.672.182	335.698	200.585	3.926.071	493.220	294.708
24	561.384	73.495	43.827	867.705	113.598	67.741	984.574	128.899	76.865	1.601.830	209.709	125.054	2.791.030	365.397	217.895	4.100.687	536.856	320.140
26	584.312	79.482	47.319	903.144	122.852	73.139	1.024.787	139.398	82.990	1.667.254	226.791	135.019	2.905.023	395.161	235.258	4.268.170	580.586	345.650
28	606.375	85.481	50.821	937.246	132.125	78.553	1.063.482	149.921	89.133	1.730.207	243.910	145.013	3.014.714	424.989	252.671	4.429.332	624.411	371.234
30	627.664	91.494	54.303	970.151	141.418	83.934	1.100.819	160.465	95.239	1.790.952	261.066	154.948	3.120.554	454.881	269.982	4.584.837	668.329	396.668
32	648.254	97.519	57.789	1.001.977	150.731	89.323	1.136.932	171.033	101.353	1.849.704	278.258	164.895	3.222.925	484.837	287.313	4.735.243	712.340	422.131
34	668.212	103.557	61.275	1.032.824	160.063	94.710	1.171.933	181.622	107.466	1.906.649	295.486	174.840	3.322.146	514.855	304.641	4.881.023	756.444	447.590
36	687.590	109.607	64.743	1.062.777	169.415	100.071	1.205.920	192.233	113.550	1.961.944	312.750	184.737	3.418.492	544.936	321.886	5.022.578	800.640	472.928
38	706.439	115.670	68.255	1.091.910	178.786	105.499	1.238.977	202.867	119.709	2.015.725	330.049	194.758	3.512.199	575.078	337.347	5.160.256	844.927	498.581
40	724.797	121.745	71.778	1.120.286	188.177	110.945	1.271.175	213.522	125.888	2.068.109	347.384	204.810	3.603.473	605.283	356.862	5.294.360	889.305	524.316

Note 1) Flow rates have been calculated according to EN 4126-1 rules with overpressure 10% (0,1 bar if p<1 barg)
Note 2) Approximate intermediate values can be obtained by linear interpolation
Note 3) Flow rates given in this table are undemanding; Mercoid Control (M) Sdn Bhd will always check fluid mechanical sizing of each safety valve, and indicate calculated flow rate in every relevant document (Specification sheet in case of offer, inspection certificate in case of order, calculation sheet when applicable)

Restricted lift valves
In order to limit an excessive discharged flow rate, it is possibile to restrict the disc lift, obtaining a lower coefficient of discharge Kd.

*Specification given are subject to changed without further notice.

Diagram showing coefficient of discharge Kd trend vs. pb/po ratio (gaseous)

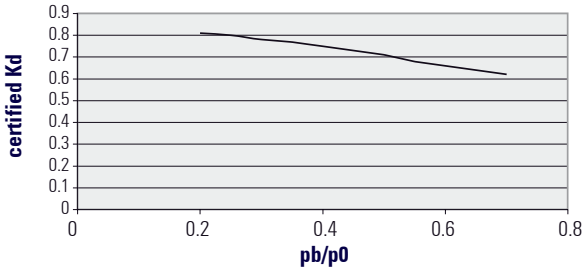

pb = backpressure (bar abs)
p0 = upstream relieving pressure (bar abs)

SAFETY VALVE API 526

CARBON STEEL / ALLOY STEEL / STAINLESS STEEL

MERCOID
Tel: 03-5569 2933 (6 Lines) Fax: 03-5569 2588, 5569 2788
Email: mercoid@mercoid.com.my, valmicro@valmicro.com.my
http://www.mercoid.com.my

VARIMEX Valves® CO. LTD.

FIG 630-*1-*2-*3

Note : *1 Class | *2 Material | *3 Connection

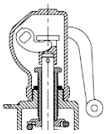

Tight Cap H4 with packed lifting lever

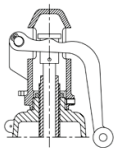

Open Cap H3 with plain lifting lever

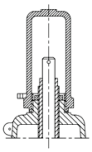

Tight Cap H2 without lifting lever

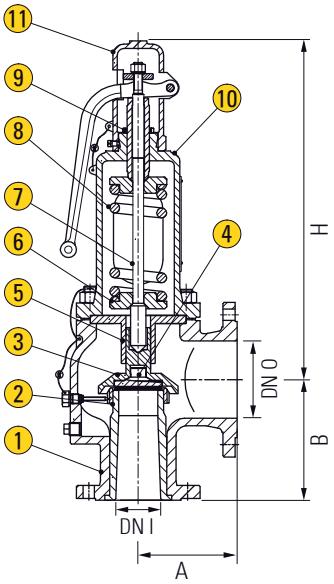

APPLICATION

Suitable for water, steam, oil, gases and others non-abrasive media (Refer to corrosion resistance table for valve materials selection).

SPECIFICATION

Pressure Rating	Class 150 and 300
Flanged End Dimension	ASME B16.5
Type-test Approved Acc. to	ASME I, ASME IIIV and API 526

MATERIAL

Parts	Carbon Steel Body	Alloy Steel Body	Stainless Steel Body
1 Valve Body	Carbon Steel ASTM A216 WCB - EN 1.0619	Alloy Steel ASTM A271 WC6 - EN 1.7357	Stainless Steel ASTM A351 CF8M - EN 1.4408
2 Full Nozzle (Seat)	Stainless Steel ASTM 316 - EN 1.4401	Stainless Steel ASTM 316 - EN 1.4401	Stainless Steel ASTM 316 - EN 1.4401
3 Disc	Stainless Steel ASTM 420 - EN 1.4028 or ASTM 316 - EN 1.4401	Stainless Steel ASTM 420 - EN 1.4028 or ASTM 316 - EN 1.4401	Stainless Steel ASTM 316 - EN 1.4401
4 Ball	Stainless Steel ASTM 420 - EN 1.4028 or ASTM 316 - EN 1.4401	Stainless Steel ASTM 420 - EN 1.4028 or ASTM 316 - EN 1.4401	Stainless Steel ASTM 316 - EN 1.4401
5 Guide	Carbon Steel or Stainless Steel ASTM 316 - EN 1.4401	Carbon Steel or Stainless Steel ASTM 316 - EN 1.4401	Stainless Steel ASTM 316 - EN 1.4401
6 Spring Plate	AVP Steel or Stainless Steel or ASTM 316 - EN 1.4401	AVP Steel or Stainless Steel or ASTM 316 - EN 1.4401	Stainless Steel ASTM 316 - EN 1.4401
7 Spindle	Stainless Steel ASTM 430F - EN 1.4104 or ASTM 316 - EN 1.4401	Stainless Steel ASTM 430F - EN 1.4104 or ASTM 316 - EN 1.4401	Stainless Steel ASTM 316 - EN 1.4401
8 Spring	Carbon Steel Alloy Steel	Carbon Steel Alloy Steel	Stainless Steel ASTM 316 S42
9 Pressure Adjusting Screw	AVP Steel or Stainless Steel ASTM 316 - EN 1.4401 with bush PTFE	AVP Steel or Stainless Steel ASTM 316 - EN 1.4401 with bush PTFE	Stainless Steel ASTM 316 - EN 1.4401 with Bush in PTFE
10 Bonnet	Carbon Steel ASTM A216 WCB - EN 1.0619	Carbon Steel ASTM A216 WCB - EN 1.0619	Stainless Steel ASTM A351 CF8M - EN 1.4408
11 Tight Cap H4 with Lifting Lever	ASTM A216 WCB - EN 1.0619	ASTM A216 WCB - EN 1.0619	Stainless Steel ASTM A351 CF8M - EN 1.4408

DIMENSIONS - INLET x OUTLET FLANGE RATINGS

Unit : mm

DN I (inch)		1x2	1-1/2x2		1-1/2x3			2x3		3x4			3x6	4x6					6x8		6x10	8x10
Orifice		D/E	F		G		H	H	J	J	K	L	K	L	M	N	P		Q	R	R	T
ASME CL 150 x 150	A	114.3	120.7	120.7	120.7	120.7	123.8	-	123.8	-	161.9	161.9	-	-	184.2	209.6	228.6	228.6	241.3	241.3	-	279.4
	B	104.8	123.8	123.8	123.8	123.8	130.2	-	136.5	-	155.6	155.6	-	-	117.8	196.9	181	181	239.7	239.7	-	276.2
ASME CL 300 x 150	A	114.3	120.7	120.7	120.7	152.4	123.8	123.8	123.8	180.9	161.9	161.9	-	181	184.2	209.6	228.6	254	241.3	241.3	266.7	279.4
	B	104.8	123.8	123.8	123.8	123.8	130.2	130.2	136.5	184.1	155.6	155.6	-	179.4	177.8	196.9	181	181	239.7	239.7	239.7	276.2
ASME CL 600 x 150	A	114.3	152.4	152.4	152.4	152.4	-	161.9	-	180.9	180.9	-	-	181	203.2	222.3	254	254	241.3	-	266.7	-
	B	104.8	123.8	123.8	123.8	123.8	-	153.9	-	184.1	184.1	-	-	179.4	177.8	196.9	225.4	225.4	239.7	-	239.7	-
ASME CL 900 x 150	A	-	-	-	-	-	-	161.9	-	180.9	-	-	215.9	222.3	222.3	222.3	254	254	-	-	-	-
	B	-	-	-	-	-	-	153.9	-	184.1	-	-	198.4	196.9	196.9	196.9	225.4	225.4	-	-	-	-
H		320	373		386			425		580			645	684					766		766	1280

*Specification given are subject to changed without further notice.

FLOW RATE TABLE

Unit : Kg/h

Set Pressure P	Orifice D			Orifice E			Orifice F			Orifice G			Orifice H			Orifice J			Orifice K		
	Water a 25ºC	Air a 25ºC	Sat. Steam	Water a 25ºC	Air a 25ºC	Sat. Steam	Water a 25ºC	Air a 25ºC	Sat. Steam	Water a 25ºC	Air a 25ºC	Sat. Steam	Water a 25ºC	Air a 25ºC	Sat. Steam	Water a 25ºC	Air a 25ºC	Sat. Steam	Water a 25ºC	Air a 25ºC	Sat. Steam
Bar	Kg/h	Kg/h	Kg/h	Kg/h	Kg/h	Kg/h	Kg/h	Kg/h	Kg/h	Kg/h	Kg/h	Kg/h	Kg/h	Kg/h	Kg/h	Kg/h	Kg/h	Kg/h	Kg/h	Kg/h	Kg/h
1	2465	107	69	4375	191	123	6875	300	193	11285	491	316	17570	766	494	28820	1257	810	41181	1796	1157
2	3486	170	108	6187	303	192	9723	474	301	15959	778	494	24847	1213	771	40758	1989	1265	58239	2842	1808
3	4270	250	158	7578	446	281	11908	699	440	19546	1145	722	30432	1787	1126	49918	2930	1846	71328	4186	2638
4	4931	316	198	8750	563	352	13750	882	552	22570	1446	905	35140	2255	1411	57640	3697	2314	82363	5283	3307
5	5513	381	237	9783	679	422	15373	1064	661	25234	1744	1083	39287	2720	1689	64443	4460	2770	92084	6372	3958
6	6039	446	275	10717	794	489	16841	1244	767	27642	2039	1257	43037	3181	1961	70594	5215	3215	100873	7452	4593
7	6523	511	313	11575	910	558	18190	1425	874	29857	2335	1433	46485	3642	2236	76251	5972	3666	108956	8533	5238
8	6973	575	352	12375	1024	627	19446	1604	982	31919	2630	1610	49695	4102	2512	81515	6726	4119	116478	9611	5885
9	7396	640	390	13125	1140	695	20625	1785	1089	33855	2926	1786	52709	4565	2785	86460	7484	4567	123544	10963	6525
10	7796	705	429	13835	1255	764	21741	1965	1197	35686	3221	1963	55561	5025	3062	91137	8238	5020	130227	11771	7173
12	8540	836	506	15156	1489	901	23816	2332	1411	39092	3823	2313	60863	5963	3608	99835	9776	5916	142656	13968	8453
14	9224	966	583	16370	1721	1038	25724	2695	1626	42224	4417	2665	65740	6889	4157	107835	11295	6816	154086	16138	9739
16	9861	1096	660	17500	1952	1176	27501	3057	1841	45140	5011	3081	70279	7816	4708	115280	12815	7719	164725	18311	11029
18	10459	1226	737	18562	2184	1312	29169	3420	2055	47878	5606	3369	74542	8745	5255	122273	14337	8615	174718	20485	12310
20	11025	1360	814	19566	2422	1450	30747	3793	2271	50468	6217	3722	78574	9697	5806	128887	15899	9519	184168	22717	13601
22	11563	1491	889	20521	2655	1583	32247	4158	2479	52931	6815	4064	82410	10630	6338	135178	17428	10392	193158	24901	14848
24	12078	1622	966	21433	2888	1720	33681	4523	2694	55285	7414	4416	86074	11563	6888	141189	18958	11293	201746	27088	16136
26	12571	1757	1044	22309	3129	1859	35056	4900	2912	57542	8032	4773	89589	12528	7444	146954	20539	12205	209984	29347	17439
28	13045	1888	1122	23151	3362	1998	36380	5264	3129	59714	8628	5128	92971	13458	7999	152501	22065	13114	217911	31527	18738
30	13503	2024	1200	23963	3604	2137	37657	5645	3347	61810	9252	5485	96234	14431	8556	157854	23659	14027	225559	33804	20042
35	14585	2354	1391	25883	4192	2477	40674	6564	3880	66763	10759	6359	103944	16781	9919	170501	27513	16262	243632	39311	23235
40	15592	2691	1583	27670	4791	2820	43482	7503	4416	71372	12298	7237	111121	19182	11288	182274	31448	18508	260454	44934	26444
45	16538	3028	1776	29349	5392	3162	46120	8444	4952	75702	13840	8116	117862	21587	12659	193330	35391	20755	276253	50567	29655
50	17432	3367	1969	30937	5996	3507	48615	9390	5491	79797	15390	9001	124237	24005	14039	203788	39356	23017	291196	56232	32887
55	18283	3708	2170	32446	6603	3865	50987	10341	6052	83691	16949	9919	130301	26436	15472	213735	43341	25366	305409	61926	36243
60	19096	4060	2359	33889	7230	4201	53255	11322	6579	87413	18557	10783	136095	28945	16819	223239	47455	27575	318989	67803	39399
70	20626	4750	2742	36605	8459	4883	57521	13246	7647	94417	21711	12533	146999	33863	19549	241125	55519	32050	344548	79325	45794
80	22051	5447	3154	39132	9699	5616	61493	15188	8794	100936	24893	14414	157149	38827	22483	257774	63657	36861	368337	90953	52667
90	23388	6156	3575	41506	10962	6366	65223	17166	9969	107058	28135	16339	166682	43884	25485	273410	71947	41782	390680	102798	59698
100	24653	6862	3988	43751	12219	7101	68751	19134	11120	112849	31361	18226	175698	48915	28428	288200	80196	46608	411813	114584	66593

FLOW RATE TABLE

Unit : Kg/h

Set Pressure P	Orifice L			Orifice M			Orifice N			Orifice P			Orifice Q			Orifice R			Orifice T		
	Water a 25ºC	Air a 25ºC	Sat. Steam	Water a 25ºC	Air a 25ºC	Sat. Steam	Water a 25ºC	Air a 25ºC	Sat. Steam	Water a 25ºC	Air a 25ºC	Sat. Steam	Water a 25ºC	Air a 25ºC	Sat. Steam	Water a 25ºC	Air a 25ºC	Sat. Steam	Water a 25ºC	Air a 25ºC	Sat. Steam
Bar	Kg/h	Kg/h	Kg/h	Kg/h	Kg/h	Kg/h	Kg/h	Kg/h	Kg/h	Kg/h	Kg/h	Kg/h	Kg/h	Kg/h	Kg/h	Kg/h	Kg/h	Kg/h	Kg/h	Kg/h	Kg/h
1	63925	2788	1796	80661	3518	2267	97224	4241	2733	142919	6234	4017	247539	10798	6958	358444	15635	10075	582441	25408	16373
2	90403	4411	2805	114072	5567	3540	137496	6712	4268	202118	9865	6274	350074	17087	10866	506917	24742	15735	823697	40206	25570
3	110721	6497	4115	139709	8198	5167	168397	9917	6229	247544	14527	9156	428751	25162	15859	620844	36435	22963	1008818	59208	37317
4	127850	8199	5132	161322	10346	6476	194448	12473	7807	285839	18334	11476	495079	31755	19877	716888	45980	28781	1164883	74720	46771
5	142940	9889	6143	180364	12479	7751	217400	15045	9345	319577	22113	13736	553515	38302	23792	801506	55460	34450	1302379	90125	55983
6	156583	11565	7129	197579	14594	8995	238149	17595	10845	350079	25861	15941	606345	44793	27610	878005	64859	39979	1426684	105400	64968
7	169129	13243	8129	213410	16711	10258	257231	20147	12367	378129	29613	18177	654928	51291	31484	948354	74268	45588	1540995	120689	74084
8	180807	14915	9133	228144	18821	11525	274991	22691	13895	404237	33352	20423	700147	57766	35373	1013833	83644	51219	1647393	135926	83234
9	191774	16595	10127	241984	20941	12816	291672	25247	15452	428758	37109	22712	742618	64274	39338	1075333	93067	56793	1747324	151239	92292
10	202148	18268	11132	255073	23052	14047	307449	27792	16935	451951	40849	24892	782788	70753	43114	1133500	102448	62428	1841842	166484	101449
12	221442	21677	13119	279419	27354	16554	336794	32979	19958	495087	48473	29335	857502	83956	50809	1241687	121567	73571	2017636	197552	119556
14	239185	25045	15115	301807	31604	19072	363779	38103	22995	534755	56004	33798	926207	97001	58539	1341175	140455	84764	2179296	228246	137745
16	255699	28417	17116	322645	35858	21598	388896	43232	26039	571677	63543	38273	990157	110058	66291	1433777	159362	95987	2329766	258970	155984
18	271210	31792	19104	342217	40117	24106	412487	48366	29064	606355	71089	42718	1050221	123129	73990	1520750	178288	107136	2471090	289726	174101
20	285880	35255	21107	360728	44487	26634	434799	53635	32111	639155	78833	47198	1107030	136542	81749	1603011	197709	118370	2604757	321287	192357
22	299834	38645	23043	378335	48764	29077	456021	58792	35057	670351	86413	51527	1161063	149671	89247	1681252	216720	129227	2731893	352180	210000
24	313166	42038	25042	395158	53046	31599	476299	63954	38097	700159	94001	55996	1212690	162813	96988	1756011	235749	140436	2853369	383104	228215
26	325954	45544	27064	411293	57470	34151	495747	69287	41174	728749	101840	60518	1262208	176390	104819	1827714	255408	151775	2969880	415050	246642
28	338258	48927	29079	426819	61739	36694	514461	74435	44240	756258	109406	65024	1309855	189494	112625	1896709	274383	163077	3081991	445885	265009
30	350131	52465	31104	441800	66199	39249	532518	79812	47320	782802	117309	69552	1355829	203182	120466	1963280	294202	174432	3190163	478093	283460
35	378184	61007	36059	477198	76982	45501	575185	92812	54858	845522	136416	80631	1464463	236278	139656						
40	404296	69733	41039	510146	87993	51785	614899	106087	62434	903901	155929	91766	1565576	270074	158942						
45	428821	78476	46023	541092	99025	58074	652199	119388	70016	958732	175479	102911	1660545	303935	178245						
50	452017	87266	51038	570361	110117	64403	687478	132761	77646	1010592	195135	114126	1750368	337980	197670						
55	474079	96104	56246	598200	121269	70975	721033	146206	85570												
60	495159	105225	61144	624799	132778	77155	753094	160082	93021												
70	534833	123105	71067	674860	155341	89677	813435	187284	108117												
80	571761	141151	81734	721456	178112	103136	869598	214738	124344												
90	606444	159534	92646	765220	201308	116906	922348	242704	140946												
100	639248	177824	103346																		

Note 1) Flow rates have been calculated according to API RP 520 rules with overpressure 10% (0,1 bar if p<1 barg)
Note 2) Approximate intermediate values can be obtained by linear interpolation
Note 3) Flow rates given in this table are undemanding; Mercoid Control (M) Sdn Bhd will always check fluid mechanical sizing of each safety valve, and indicate calculated flow rate in every relevant document (Specification sheet in case of offer, inspection certificate in case of order, calculation sheet when applicable)

Diagram showing coefficient of discharge Kd trend vs. pb/po ratio (gaseous)

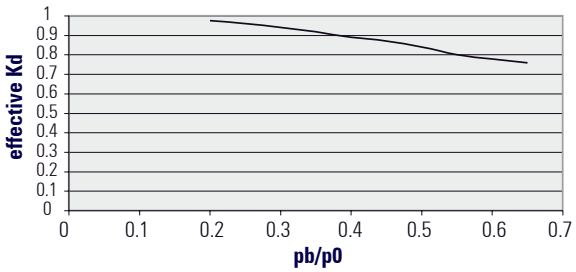

pb = backpressure (bar abs)
p0 = upstream relieving pressure (bar abs)

*Specification given are subject to changed without further notice.

SAFETY VALVE PROPOTIONAL TYPE
BRONZE

MERCOID
Tel: 03-5569 2933 (6 Lines) Fax: 03-5569 2588, 5569 2788
Email: mercoid@mercoid.com.my, valmicro@valmicro.com.my
http://www.mercoid.com.my

MIPEL

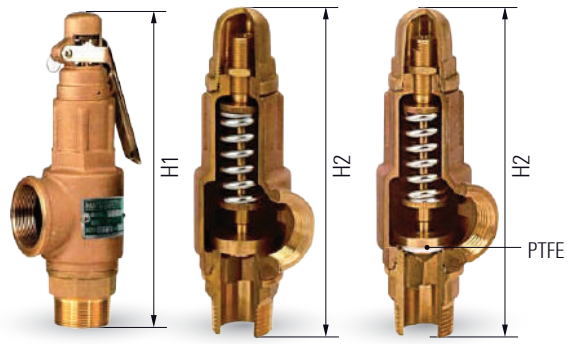

FVS-10L **FVS-10** **FVS-10T**

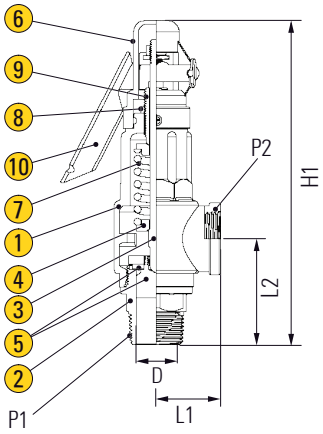

FVS-10LT

APPLICATION
Suitable for water, steam, oil, gases and non-abrasive media
(Refer to corrosion resistance table for valve materials selection).

SPECIFICATION

End Connection	Male thread inlet Female thread outlet
Adjustment Range	Standard 0.3 to 10 kg/cm² Up to 40 Bar (optional)
Working Temperature	Up to 225ºC
Optional	Lifting lever, Disc with PTFE

MATERIAL

Parts	Material			
	FVS-10L with lever	FVS-10 without lever	FVS-10LT with lever	FVS-10T without lever
1 Valve Body	Bronze	Bronze	Bronze	Bronze
2 Valve Seat	Brass	Brass	Brass	Brass
3 Spindle	Brass	Brass	Brass	Brass
4 Spring Seat	Brass	Brass	Brass	Brass
5 Disc	Brass	Brass	Brass + PTFE	Brass + PTFE
6 Cap	Bronze	Brass	Bronze	Brass
7 Spring	Steel	Steel	Steel	Steel
8 Nut	Brass	Brass	Brass	Brass
9 Adjusting Screw	Brass	Brass	Brass	Brass
10 Handle	Steel	-	Steel	-
Working Pressure	0.3 ~ 40 (kg/cm²)			
Working Temperature	-45ºC ~ 225ºC			

DIMENSIONS
Unit : mm

Size P1 x P2	Orifice	Lift	L1	L2	H1	H2
1/2 x 1/2	13	0.52	32	48	158	137
3/4 x 3/4	19	0.76	36	55	169	145
1 x 1	25	1	40	65	199	175
1-1/4 x 1-1/4	32	1.28	52	75	223	198
1-1/2 x 1-1/2	38	1.52	58	86	243	225
2 x 2	50	2	65	100	248	256

*Specification given are subject to changed without further notice.

MERCOID
Tel: 03-5569 2933 (6 Lines) Fax: 03-5569 2588, 5569 2788
Email: mercoid@mercoid.com.my, valmicro@valmicro.com.my
http://www.mercoid.com.my

SAFETY VALVE FULL LIFT TYPE
BRONZE

MIPEL

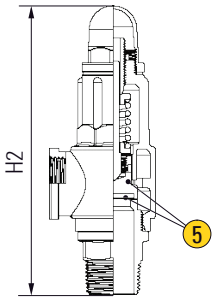

FVXL-BSS
FVXL-BBB

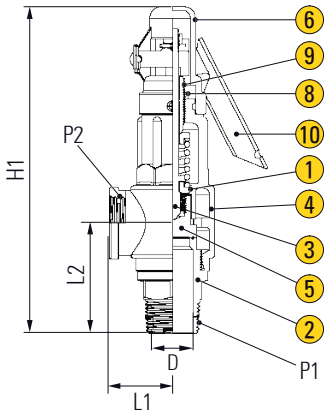

FVGX-BVS **FVGX-BVB**
FVGX-BTS **FVGX-BTB**

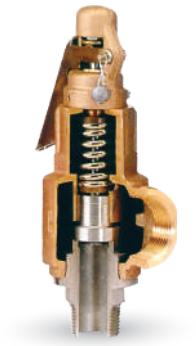

FVGXL-BSS

APPLICATION

Suitable for water, steam, oil, gases and non-abrasive media
(Refer to corrosion resistance table for valve materials selection).

SPECIFICATION

End Connection	Male thread inlet Female thread outlet
Adjustment Range	Standard 0.3 to 10 kg/cm² Up to 40 Bar (optional)
Working Temperature	Up to 225°C
Optional	Lifting lever, Disc with PTFE

MATERIAL

Parts	Material					
	FVXL-BSS with lever	FVX-BSS without lever	FVGXL-BVS with lever	FVGX-BVS without lever	FVGXL-BTS with lever	FVGX-BTS without lever
1 Valve Body	Bronze	Bronze	Bronze	Bronze	Bronze	Bronze
2 Valve Seat	SS304	SS304	SS304	SS304	SS304	SS304
3 Spindle	Brass	Brass	Brass	Brass	Brass	Brass
4 Spring Seat	Brass	Brass	Brass	Brass	Brass	Brass
5 Disc	SS304	SS304	SS304 + Viton	SS304 + Viton	SS304 + PTFE	SS304 + PTFE
6 Cap	Bronze	Brass	Bronze	Brass	Bronze	Brass
7 Spring	Steel	Steel	Steel	Steel	Steel	Steel
8 Nut	Brass	Brass	Brass	Brass	Brass	Brass
9 Adjusting Screw	Brass	Brass	Brass	Brass	Brass	Brass
10 Handle	Steel	-	Steel	-	Steel	-
Working Pressure	0.1 ~ 40 (kg/cm²)		0.1 ~ 40 (kg/cm²)		0.1 ~ 40 (kg/cm²)	
Working Temperature	-196°C ~ 225°C		-40°C ~ 200°C		-40°C ~ 200°C	

DIMENSIONS

Unit : mm

Size P1 x P2	Orifice D	Lift	L1	L2	H1	H2
1/2 x 3/4	15	1.04	35	53.5	169	144.6
1/2 x 1	15	1.52	39	63	196.5	172.6
3/4 x 1	19	1.52	39	62.5	196	172
1 x 1	21	1.52	39	68	210.5	178
1 x 1-1/4	26	2	52	74.5	215.5	197
1-1/4 x 1-1/2	33	2.56	58.5	88.5	245.5	227
1-1/2 x 2	39	3.04	64.5	100.5	284.5	258
2 x 2	39	3.04	64.5	103.5	287.5	261
2 x 2-1/2	50	4	72	110	303	277

General Note

FVXL-BSS
FVX-BSS
(with metal-to-metal sealing)

FVGXL-BVS
FVGX-BVS
(with disc insert Viton)

FVGXL-BTS
FVGX-BTS
(with disc insert PTFE

*Specification given are subject to changed without further notice.

SAFETY VALVE FULL LIFT TYPE
STAINLESS STEEL

MERCOID
Tel: 03-5569 2933 (6 Lines) Fax: 03-5569 2588, 5569 2788
Email: mercoid@mercoid.com.my, valmicro@valmicro.com.my
http://www.mercoid.com.my

MIPEL

FVFX

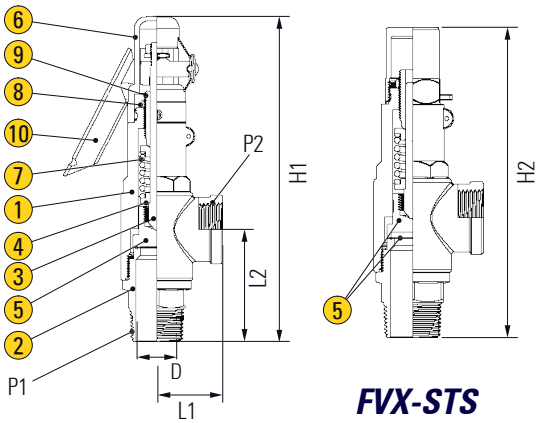

FVXL-SSS

FVX-STS
FVX-SVS

APPLICATION
Suitable for water, steam, oil, gases and non-abrasive media
(Refer to corrosion resistance table for valve materials selection).

SPECIFICATION

End Connection	Male thread inlet Female thread outlet
Adjustment Range	Standard 0.3 to 10 kg/cm² Up to 110 Bar (optional)
Working Temperature	Up to 350°C
Optional	Lifting lever, Disc with PTFE

MATERIAL

Parts	Material									
	FVXL-SSS with lever, metal-to-metal sealing	FVX-SSS metal-to-metal sealing	FVXL-SVS with lever, disc insert Viton	FVX-SVS disc insert Viton	FVXL-STS with lever, disc insert PTFE	FVX-STS disc insert PTFE	FVHXL with lever, inlet flange outlet thread	FVFHX inlet flange outlet thread	FVFFXL with lever, inlet flange outlet thread	FVFX inlet flange outlet thread
1 Valve Body	SS304 / SS316	SS304 / SS316	SS304 / SS316	SS304 / SS316	SS304 / SS316	SS304 / SS316	SS304 / SS316	SS304 / SS316	SS304 / SS316	SS304 / SS316
2 Valve Seat	SS316	SS316	SS316	SS316	SS316	SS316	SS304 / SS316	SS304 / SS316	SS304 / SS316	SS304 / SS316
3 Spindle	SS304	SS304	SS304	SS304	SS304	SS304	SS304	SS304	SS304	SS304
4 Spring Seat	SS304	SS304	SS304	SS304	SS304	SS304	SS304	SS304	SS304	SS304
5 Disc	SS316	SS316	SS316 + Viton	SS316 + Viton	SS316 + PTFE	SS316 + PTFE	SS316	SS316	SS316	SS316
6 Cap	SS304	SS304	SS304	SS304	SS304	SS304	SS304	SS304	SS304	SS304
7 Spring	SS304	SS304	SS304	SS304	SS304	SS304	SS304	SS304	SS304	SS304
8 Nut	SS304	SS304	SS304	SS304	SS304	SS304	SS304	SS304	SS304	SS304
9 Adjusting Screw	SS304	SS304	SS304	SS304	SS304	SS304	SS304	SS304	SS304	SS304
10 Handle	SS304	-	SS304	-	SS304	-	SS304	-	SS304	-
Working Pressure	0.1 ~ 100 (kg/cm²)		0.1 ~ 50 (kg/cm²)		0.1 ~ 50 (kg/cm²)		0.1 ~ 100 (kg/cm²)		0.1 ~ 100 (kg/cm²)	
Working Temperature	-196°C ~ 350°C		-40°C ~ 200°C		-40°C ~ 200°C		-196°C ~ 350°C		-196°C ~ 350°C	

DIMENSIONS
Unit : mm

FVXL-SSS ~ FVX-STS						
Size P1 x P2	Orifice D	Lift	L1	L2	H1	H2
1/2 x 1	15	1	41	66	200	179
3/4 x 1	20	1.5	41	66	200	179
1 x 1	21	2	41	71	205	183
1-1/4 x 2	33	2.5	65	101	285	261
1-1/2 x 2	39	3	65	101	285	261
2 x 2	39	4	65	104	288	265

DIMENSIONS
Unit : mm

FVHXL ~ FVFX										
Size	Orifice	Lift	FVHXL & FVFHX				FVFFXL & FVFX			
P1 x P2	D		L1	L2	H1	H2	L1	L2	H1	H2
1/2 x 1/2	15	1	41	66	200	179	84.5	72	203	182
3/4 x 3/4	20	1.5	41	72	-	183	-	72	203	-
3/4 x 1	20	1.5	41	72	200	-	84.5	-	-	182
1 x 1	21	2	41	77	205	183	99	77	210	187
1-1/4 x 1-1/4	33	2.5	65	101	285	261	128	106	289	265
1-1/2 x 1-1/2	39	3	65	101	285	261	135	107	290	266
2 x 2	39	4	65	104	288	265	321	293	293	268

*Specification given are subject to changed without further notice.

MERCOID
Tel: 03-5569 2933 (6 Lines) Fax: 03-5569 2588, 5569 2788
Email: mercoid@mercoid.com.my, valmicro@valmicro.com.my
http://www.mercoid.com.my

PRESSURE REDUCING VALVE
SCREW END
CAST IRON / STAINLESS STEEL

VARIMEX Valves® CO. LTD.

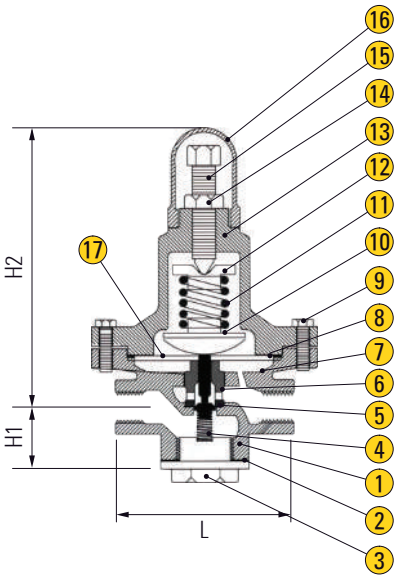

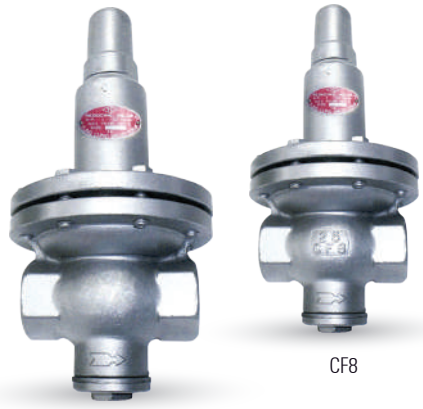

APPLICATION
Suitable for water, steam, oil, gases and non-abrasive media
(Refer to corrosion resistance table for valve materials selection).

SPECIFICATION

Spring Range	1 to 6 Barg adjustable
Pressure Rating	10 Bar
Working Temperature	Up to 200°C
End Connection	Screwed end BSPT

MATERIAL

	Parts	Cast Iron	Stainless Steel
1	Body	Cast Iron	CF8
2	Gasket	Asbestos	Asbestos
3	Bottom Plug	Cast Iron	CF8
4	Bottom Spring	SUP-6	SUP-6
5	Spring Knob	PTFE	PTFE
6	Stem	CF8	CF8
7	Stem Guide	CF8	CF8
8	Gasket	Asbestos	Asbestos
9	Bolt	SS41	CF8
10	Spring Knob	SS41	SS41
11	Top Spring	SUP-6	SUP-6
12	Spring Holder	SS41	SS41
13	Top Ud	Cast Iron	CF8
14	Positioning Nut	SS41	CF8
15	Adjusting Screw	SS41	CF8
16	Top Cap	Cast Iron	CF8
17	Diaphragm Disc	AIS-301	AIS-301

DIMENSIONS

Unit : mm

Size		L	H1	H2	Weight (Kg)
mm	Inch				
15	1/2	95	55	185	4
20	3/4	95	55	185	4.2
25	1	95	55	185	4.4
32	1-1/4	130	72	205	6.5
40	1-1/2	130	72	205	7
50	2	168	90	260	13

*Specification given are subject to changed without further notice.

PRESSURE REDUCING VALVE FLANGE END

CAST IRON / CAST STEEL / STAINLESS STEEL

MERCOID
Tel: 03-5569 2933 (6 Lines) Fax: 03-5569 2588, 5569 2788
Email: mercoid@mercoid.com.my, valmicro@valmicro.com.my
http://www.mercoid.com.my

VARIMEX Valves® CO. LTD. TL

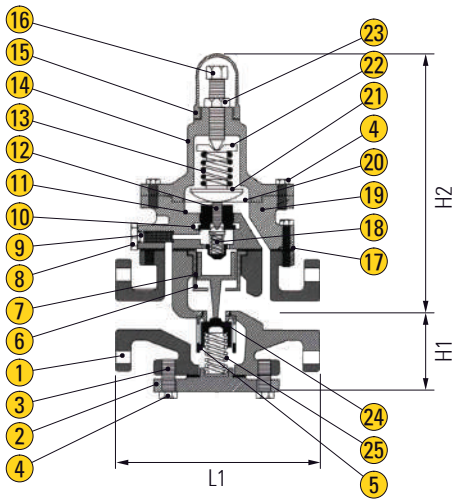

APPLICATION

Suitable for water, steam, oil, gases and non-abrasive media (Refer to corrosion resistance table for valve materials selection).

SPECIFICATION

Spring Range	1 to 6 Barg adjustable
Pressure Rating	10 Bar
Working Temperature	Up to 200°C
End Connection	Flanged end to ANSI 150, JIS10K and PN16

MATERIAL

	Parts	Cast Iron	Stainless Steel
1	Main Body	Cast Iron	SUS304
2	Bottom Cover	Cast Iron	SUS304
3	Gasket	Asbestos	Asbestos
4	Bolt	SS41	SUS304
5	Valve Seat	CF8	CF8
6	Cylinder	CF8	CF8
7	Piston	CF8	CF8
8	Stinger Plug	SS41	SUS304
9	Screen	SS304	SUS304
10	Spring Knob	SUS304	SUS304
11	Pin Guide	SUS304	SUS304
12	Floating Pin	SUS304	SUS304
13	Upper Spring	SUP-6	SUP-6
14	Top Ud	Cast Iron	SUS304
15	Top Cap	Cast Iron	SUS304
16	Adjusting Screw	SS41	SUS304
17	Body Gasket	Asbestos	Asbestos
18	Setral Spring	SUS304	SUS304
19	Transit Body	Cast Iron	SUS304
20	Diaphragm Disc	AIS-301	AIS-301
21	Spring Knob	SS41	SS41
22	Spring Holder	SS41	SS41
23	Positioning Nut	SS41	SUS304
24	Gasket	PTFE	PTFE
25	Lower Spring	SUP-6	SUP-6

DIMENSIONS - ANSI 150LB / JIK10K / PN16-DIN-2633

Unit : mm

Size		L		H1	H2	Weight (Kg)
mm	Inch	CI	CF8			
15	1/2	155	158	74	260	10
20	3/4	155	158	74	260	10.5
25	1	165		74	260	11
32	1-1/4	195		99	280	16
40	1-1/2	195		99	280	17
50	2	225		116	310	24
65	2-1/2	250		125	322	31
80	3	290		135	325	37
100	4	330		153	370	50
125	5	410		195	540	98
150	6	410		195	540	105

*Specification given are subject to changed without further notice.

MERCOID
Tel: 03-5569 2933 (6 Lines) Fax: 03-5569 2588, 5569 2788
Email: mercoid@mercoid.com.my, valmicro@valmicro.com.my
http://www.mercoid.com.my

PRESSURE REDUCING VALVE
FLANGE END
DUCTILE IRON / CAST IRON / STAINLESS STEEL

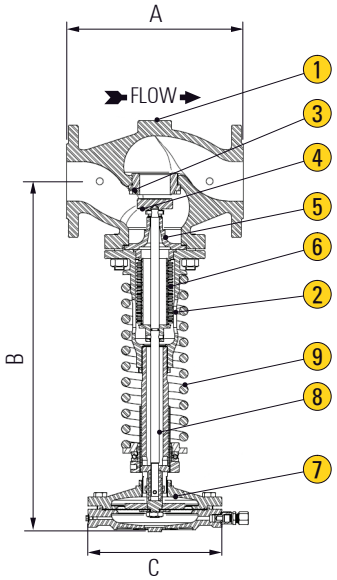

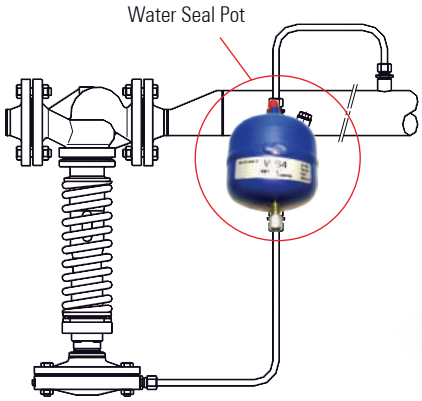

Cast Iron / Cast Steel

Stainless Steel

APPLICATION
Suitable for water, steam, oil, gases and non-abrasive media
(Refer to corrosion resistance table for valve materials selection).

SPECIFICATION

Spring Range	1 to 25 Barg adjustable
Pressure Rating	40 Bar
Working Temperature	Up to 250°C
End Connection	Flanged end to ANSI 150, JIS10K and PN16

MATERIAL

	Parts	Material
1	Valve Body RP45G	GJS-400-15 / 0.7040
	Valve Body RP45S	A216WCB / 1.0619
	Valve Body RP45I	CF8M / 1.4408
2	Piston Body RP45G and PR45S	GJS-400-15 / 0.7040
	Piston Body RP45I	GJS-400-15 / 0.7040 Nickel plated
3	Valve Seat	Stainless Steel
4	Valve Disc *	Hardened Stainless Steel
	Soft Valve Disc *	AISI 304 /1.4301; NBR (PTFE/GR,etc.)
5	Guide	Bronze B62 / ASTM B148-97
6	Bellows *	AISI 316 Ti / 1.4571
7	Diaph. Chamber RP45G *	GJL-250 / 0.6025
	Diaph. Chamber RP45S *	A216WCB / 1.0619
	Diaph. Chamber RP45I *	CF8M / 1.4408
8	Spindle	AISI 304 / 1.4301
9	Regulating Spring	Spring steel

* Available spare parts.

DIMENSIONS

Unit : mm

Valve				Actuator	
Size (DN)	A	B	Weight (Kg)	C	Weight (Kg)
15	130	440	12.7	172	4.3
20	150	440	12.7	172	4.3
25	160	440	13.7	172	4.3
32	180	445	15.7	172	4.3
40	200	445	17.7	172	4.3
50	230	540	25.7	220	7.3
65	290	540	29.7	220	7.3
80	310	610	36.7	282	11.3
100	350	650	53.7	340	16.3
125	400	780	101.4	172	4.4
150	480	790	134.5	220	7.4

*Specification given are subject to changed without further notice.

PRESSURE REDUCING VALVE
PILOT OPERATED
CAST STEEL

MERCOID
Tel: 03-5569 2933 (6 Lines) Fax: 03-5569 2588, 5569 2788
Email: mercoid@mercoid.com.my, valmicro@valmicro.com.my
http://www.mercoid.com.my

VARIMEX Valves® CO. LTD.

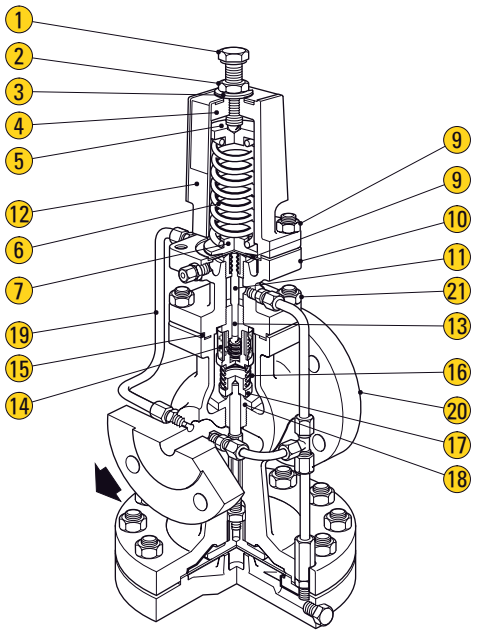

APPLICATION
Suitable for water, steam, oil, gases and non-abrasive media
(Refer to corrosion resistance table for valve materials selection).

SPECIFICATION

Spring Range	1 to 160 Barg adjustable
Pressure Rating	240 Bar
Working Temperature	Up to 425ºC
End Connection	Flanged end to ANSI 150, 300 and 600, PN16, PN40 and PN64

MATERIAL

	Parts	Material		
1	Adjustment Screw		Steel	BS 3692 Gr. 8.8
2	Adjustment lock-nut		Steel	BS 3692 Gr. 8
3	Washer		S. Steel	BS 1449 304 S16
4	Spring Housing		Cast Steel	DIN 17245 GS C25
5	Top Spring Plate		S. Steel	BS 970 220 Mo7
6	Pressure Adjustment Spring		S. Steel	BS 2056 302 S25
7	Bottom Spring Plate		Steel	BS 970 220 Mo7
8	Spring Housing	Securing Nuts	Steel	BS 3692 Gr. 8
9	Pilot Diaphragm		S. Steel	BS 1449 316 S31
10	Pilot Valve Housing		Steel	
11	Pilot Valve Plunger		S. Steel	BS 970 431 S29
12	Spring Housing Cover		S. Steel	BS 1449 304 S12

	Parts	Material		
13	Pilot Valve and Seat Unit		S. Steel	BS 970 431 S29
14	Internal Strainer		S. Steel	BS 1449 304 S16
15	Body Gasket	Stainless Steel Reinforced Exfoliated Graphite		
16	Main Valve Return Spring		S. Steel	BS 2056 302 S16
17	Main Valve		S. Steel	BS 970 431 S29
18	Main Valve Seat		S. Steel	BS 970 431 S29
19	Balance Pipe Assembly		S. Steel	BS 3605 304 S14
20	Main Valve Body		Cast Steel	DIN 17245 GS C25
21	Pilot Valve Housing	Securing Nuts	Steel	BS 3692 Gr. 8
		Securing Studs	Steel	BS 4439 Gr. 8.8

DIMENSIONS
Unit : mm

Size (DN)	External Dimension						
	L			H	H1	H	H1
	PN 16/25 ANSI 150	PN 40 ANSI 300	PN 64 ANSI 600	PN 16/25/40 ANSI 150/300		PN 64 ANSI 600	
15	160	180	180	295	90	305	100
20	160	180	180	330	98	340	105
25	180	200	200	330	110	340	120
32	200	220	220	330	110	340	120
40	220	240	240	345	125	355	135
50	250	270	270	345	125	355	135
65	280	300	300	350	130	360	140
80	310	330	330	385	160	395	170
100	350	380	380	385	170	400	185
125	400	450	450	400	200	415	215
150	450	500	500	415	210	430	225
200	500	550	550	475	240	495	260
250	650			525	290	545	310
300	800			580	335	600	355

*Specification given are subject to changed without further notice.

MERCOID
Tel: 03-5569 2933 (6 Lines) Fax: 03-5569 2588, 5569 2788
Email: mercoid@mercoid.com.my, valmicro@valmicro.com.my
http://www.mercoid.com.my

EXPANSION JOINT AXIAL TYPE
STAINLESS STEEL

VARIMEX Valves® CO. LTD. HELS HOSE-EXPANSION JOINT-LEVEL CONTROL-STEAM TRAP

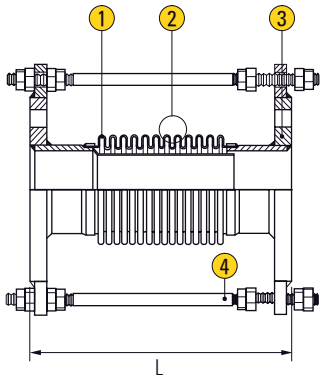

Available Upon Request :


Flange Single Bellow Rubber Expansion Joint


Flange Double Bellow Rubber Expansion Joint


Threaded Rubber Expansion Joint


Flange SS Braided Hose


Threaded SS Braided Hose

SPECIFICATION

Size Range	15mm to 600mm (1/2" to 24")
Material	Stainless steel ASIS 321
Connection	Welding end, Flanged end to DIN ANSI B16.5 and JIS standards
Working Pressure	Up to 45 Bar
Working Temperature	Up to 400ºC

APPLICATION

Suitable for water, steam, oil, gases and others non-abrasive media (Refer to corrosion resistance table for valve materials selection).

MATERIAL

	Parts	Material
1	Bellows	SUS304 / SUS316
2	Internal Sleeve	SUS304 / SUS316
3	Flange	SS400 / SUS304 / SUS316
4	Limit Rods	S25C / SUS304 / SUS316

DIMENSIONS

Unit : mm (inch)

Nominal Bore	Total Length	Bellows			Axial Movement	Working Pressure		Axile Spring Plate (N/mm)	Effective Area	
		O.D.	Corr. (no.)	PLY (no.)		Bar	PSI		cm²	Inch²
15 (1/2)	300 (9.84)	25 (0.98)	36	1	32 (1.25)	10	145.2	10.96	3.6	0.6
	350 (13.78)		52		50 (2)	25	363	8.72	3.5	0.5
20 (3/4)	300 (9.84)	32.5 (1.28)	31	1	32 (1.25)	10	145.2	16.17	5.9	0.9
	350 (13.78)		46		50 (2)	25	363	13.23	5.9	0.9
25 (1)	300 (9.84)	38 (1.50)	28	1	32 (1.25)	10	145.2	31.26	8.4	1.3
	350 (13.78)		40		50 (2)	25	363	14.41	8.4	1.3
32 (1-1/4)	300 (9.84)	48.0 (1.91)	36	1	50 (2)	10	145.2	17.93	13.2	2.0
	350 (13.78)			2		25	363	19.01	13.8	2.1
40 (1-1/2)	300 (9.84)	58.0 (2.30)	32	1	50 (2)	10	145.2	22.44	20.2	3.1
	350 (13.78)			2		25	363	28.91	20.2	3.1
50 (2)	300 (9.84)	75.0 (2.99)	24	1	50 (2)	10	145.2	18.42	32.8	5.1
	350 (13.78)			2		25	363	44.10	32.1	5.0
65 (2-1/2)	300 (9.84)	90.0 (3.58)	20	1	50 (2)	10	145.2	45.37	49.6	7.7
	350 (13.78)			2		25	363	89.57	49.1	7.6
80 (3)	300 (9.84)	104.0 (4.13)	20	1	50 (2)	10	145.2	45.08	67.8	10.5
	350 (13.78)			2		25	363	81.34	67.4	10.4
100 (4)	300 (9.84)	130.0 (5.20)	16	1	50 (2)	10	145.2	47.82	108.0	16.7
	350 (13.78)			2		25	363	145.73	108.9	16.9
125 (5)	300 (9.84)	160.0 (6.42)	15	1	50 (2)	10	145.2	84.87	166.5	25.8
	350 (13.78)			2		25	363	160.72	167.1	25.9
150 (6)	300 (9.84)	194.0 (7.64)	14	1	50 (2)	10	145.2	78.99	232.4	36.0
	350 (13.78)			2		25	363	192.37	239.2	37.1
200 (8)	300 (9.84)	252.0 (9.92)	13	1	50 (2)	10	145.2	136.42	394.1	61.1
	350 (13.78)			2		25	363	263.52	420.9	65.2
250 (10)	300 (9.84)	313.0 (12.40)	12	1	50 (2)	10	145.2	179.63	589.7	91.4
	350 (13.78)			2		25	363	427.97	664.6	103.0
300 (12)	300 (9.84)	360.0 (14.29)	12	1	50 (2)	10	145.2	183.95	829.6	128.6
	350 (13.78)			2		25	363	498.62	925.4	143.4

Note : Other movements, sizes, pressure, material expansion joints are available on request

*Specification given are subject to changed without further notice.

EXPANSION JOINT
GIMBAL TYPE / EXTERNAL PRESSURIZED TYPE
STAINLESS STEEL

MERCOID
Tel: 03-5569 2933 (6 Lines) Fax: 03-5569 2588, 5569 2788
Email: mercoid@mercoid.com.my, valmicro@valmicro.com.my
http://www.mercoid.com.my

VARIMEX Valves® CO. LTD.
HELS HOSE-EXPANSION JOINT-LEVEL CONTROL-STEAM TRAP


Gimbal Type


External Pressurized Type

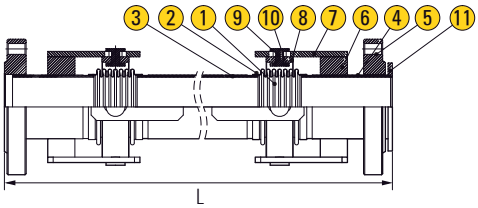

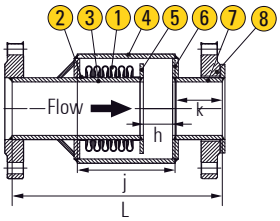

APPLICATION
Suitable for water, steam, oil, gases and others non-abrasive media
(Refer to corrosion resistance table for valve materials selection).

SPECIFICATION

Size Range	25mm to 600mm (1" to 24")
Material	Stainless steel ASIS 321
Connection	Welding end, Flanged end to DIN, ANSI B16.5 and JIS standards
Working Pressure	Up to 45 Bar
Working Temperature	Up to 400°C

MATERIAL - GIMBAL TYPE

	Parts	Material
1	Bellow	AISI 304
2	Band	AISI 304
3	Intermediate Pipe	St. 37.2
4	Butt Weld	St. 37.2
5	Flange	St. 37.2
6	Short Blade	St. 37.2
7	Long Blade	St. 37.2
8	Gimbal	St. 37.2
9	Gib	St. 37.2
10	Washer	St. 37.2
11	Collar	St. 37.2

MATERIAL - EXTERNAL PRESSURIZED TYPE

	Parts	Material
1	Bellow	AISI 304
2	Band	AISI 304
3	Inner Pipe	St. 37.2
4	Outer Pipe	St. 37.2
5	Centering Flange	St. 37.2
6	Outer Pipe Flange	St. 37.2
7	Butt Weld	St. 37.2
8	Flange	St. 37.2

DIMENSIONS - GIMBAL TYPE
Unit : mm

Size (DN)	Movement			100 KMF	100 KMF			300 KMF			400 KMF		
	±X	±Y	±Z	L	±Y	±Z	L	±Y	±Z	L	±Y	±Y	L
25	50	50	50	720	100	100	920	150	150	1120	200	200	1320
32	50	50	50	720	100	100	920	150	150	1120	200	200	1320
40	50	50	50	720	100	100	920	150	150	1120	200	200	1320
50	50	50	50	800	100	100	1000	150	150	1200	200	200	1420
65	50	50	50	800	100	100	1000	150	150	1250	200	200	1500
80	50	50	50	830	100	100	1030	150	150	1270	200	200	1500
100	50	50	50	850	100	100	1050	150	150	1300	200	200	1550
125	50	50	50	980	100	100	1180	150	150	1480	200	200	1780
150	50	50	50	980	100	100	1180	150	150	1480	200	200	1780
200	50	50	50	1140	100	100	1340	150	150	1700	200	200	2050
250	50	50	50	1140	100	100	1340	150	150	1700	200	200	2100
300	50	50	50	1200	100	100	1400	150	150	1760	200	200	2106

DIMENSIONS - EXTERNAL PRESSURIZED TYPE
Unit : mm

Size (DN)	Design Pressure : PN16 Axial Movement : -20mm + 10				Design Pressure : PN16 Axial Movement : -40mm + 20				Design Pressure : PN16 Axial Movement : -70mm + 20			
	h	k	j	L	h	k	j	L	h	k	j	L
25	30	80	180	360	50	80	300	490	80	80	300	520
32	30	80	180	360	50	80	300	490	80	80	300	520
40	30	80	200	380	50	80	310	500	80	80	310	530
50	30	80	190	370	50	80	290	480	80	80	290	510
65	30	80	190	370	50	80	280	470	80	80	280	500
80	30	80	190	370	50	80	280	470	80	80	280	500
100	30	80	200	380	50	80	290	480	80	80	290	510
125	30	80	180	380	50	80	290	490	80	80	290	520
150	30	80	210	400	50	80	310	510	80	80	310	540
200	30	80	200	420	50	80	300	530	80	100	300	560
250	30	80	210	440	50	80	300	540	80	100	300	570
300	30	80	230	460	50	80	330	570	80	100	330	600

*Specification given are subject to changed without further notice.

MERCOID
Tel: 03-5569 2933 (6 Lines) Fax: 03-5569 2588, 5569 2788
Email: mercoid@mercoid.com.my, valmicro@valmicro.com.my
http://www.mercoid.com.my

STEAM TRAP
THERMODYNAMIC TYPE
CAST IRON / FORGED STEEL / STAINLESS STEEL

HELS HOSE-EXPANSION JOINT-LEVEL CONTROL-STEAM TRAP
ESCO Steam Traps

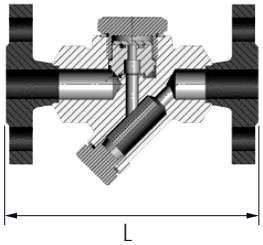

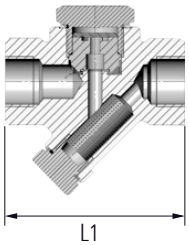

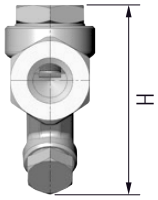

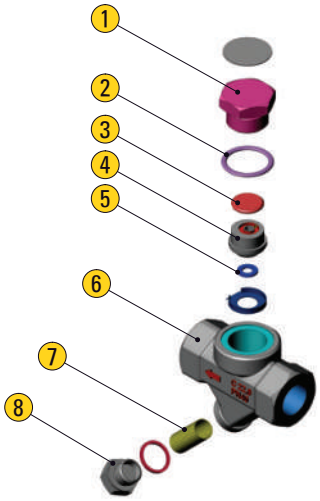

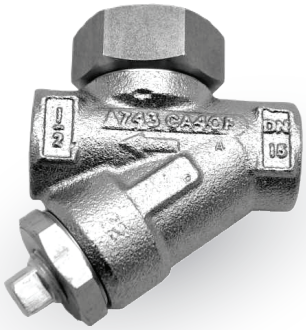

APPLICATION
Suitable for steam
(Refer to corrosion resistance table for valve materials selection).

SPECIFICATION

Size Range	1/4" to 2"
Body Material	Cast Iron, Ductile Iron, Forged steel, Stainless Steel
Pressure Rating	Up to 45 Bar
Working Temperature	Up to 425°C
Connection	Threaded, Socket weld, Flanged end

MATERIAL

	Parts	Material
1	Cover	Cadmium Coated St.37
2	Cover Gasket	Stainless Steel AISI 304
3	Disc	Stainless Steel AISI 420
4	Seat	Stainless Steel AISI 420
5	Seat Gasket	Stainless Steel AISI 304
6	Body	Cast Iron / Forged Steel - A105N / Stainless Steel - F316
7	Strainer Screen	Stainless Steel AISI 304
8	Discharge Bolt	Stainless Steel AISI 304

DIMENSIONS

Unit : mm

Size (DN)	Flanged	Threaded	H
	L	L1	
15	150	95	60
20	150	95	60
25	160	95	60
32	205	170	115
40	205	170	115
50	240	200	120

*Specification given are subject to changed without further notice.

STEAM TRAP BALL FLOAT TYPE

CAST IRON / DUCTILE IRON / CAST STEEL / STAINLESS STEEL

MERCOID
Tel: 03-5569 2933 (6 Lines) Fax: 03-5569 2588, 5569 2788
Email: mercoid@mercoid.com.my, valmicro@valmicro.com.my
http://www.mercoid.com.my

HELS HOSE-EXPANSION JOINT-LEVEL CONTROL-STEAM TRAP
ESCO Steam Traps

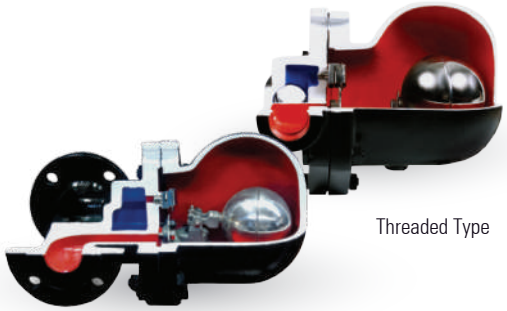

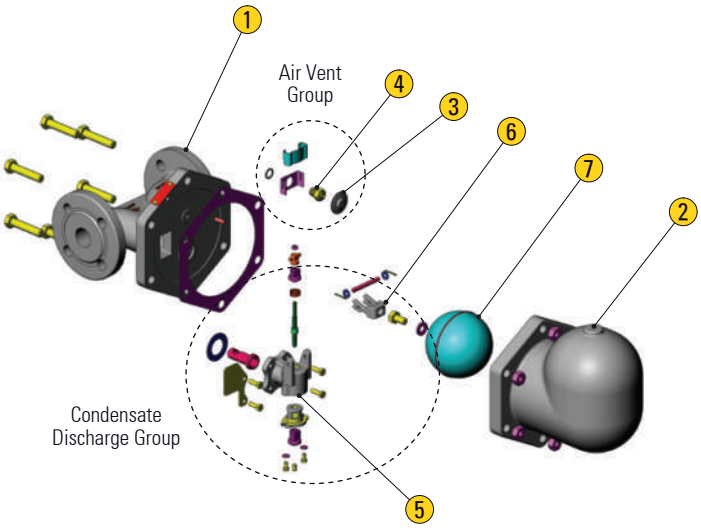

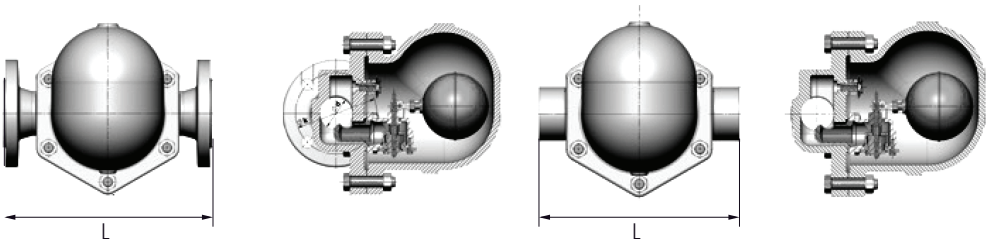

Flanged Type

Threaded Type

APPLICATION

Suitable for steam
(Refer to corrosion resistance table for valve materials selection).

SPECIFICATION

Size Range	1/2" to 4"
Body Material	Cast Iron, Ductile Iron, Cast steel
Pressure Rating	Up to 32 Bar
Working Temperature	Up to 450ºC
Connection	Threaded end , Flanged end

MATERIAL

	Parts	Material
1	Body	GGG 40.3 / GSC 25 / Stainless Steel
2	Cover	GGG 40.3 / GSC 25 / Stainless Steel
3	Thermostatic Capsule	Stainless Steel
4	Air Vent Seat	Stainless Steel AISI 304
5	Valve Assembly	Stainless Steel
6	Float Lever	Stainless Steel AISI 304
7	Float	Stainless Steel AISI 304

DIMENSIONS

Unit : mm

Size (DN)	Flanged	Threaded
	L	L
15	150	122
20	150	122
25	160	145
32	320	270
40	320	270
50	320	300

*Specification given are subject to changed without further notice.

MERCOID
Tel: 03-5569 2933 (6 Lines) Fax: 03-5569 2588, 5569 2788
Email: mercoid@mercoid.com.my, valmicro@valmicro.com.my
http://www.mercoid.com.my

STEAM TRAP INVERTED BUCKET TYPE

CAST IRON / DUCTILE IRON / CAST STEEL / STAINLESS STEEL

HELS HOSE-EXPANSION JOINT-LEVEL CONTROL-STEAM TRAP
ESCO Steam Traps

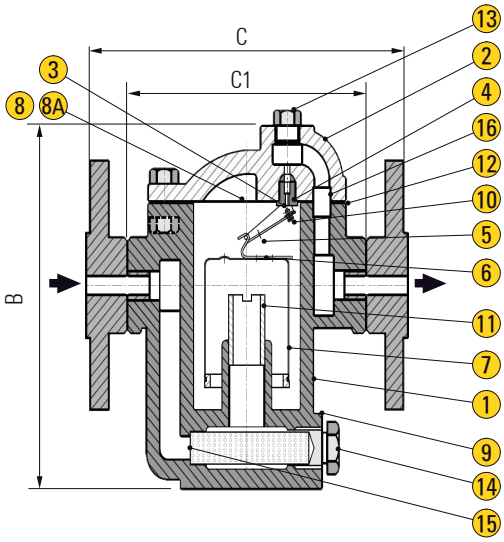

APPLICATION

Suitable for steam
(Refer to corrosion resistance table for valve materials selection).

SPECIFICATION

Size Range	1/2" to 2-1/2"
Body Material	Cast Iron, Ductile Iron, Cast steel, Stainless Steel
Pressure Rating	Up to 64 Bar
Working Temperature	Up to 425°C
Connection	Threaded, Socket weld, Flanged end

MATERIAL

	Parts	Material
1	Bonnet	CI ASTM A48 Class 30
2	Body	CI ASTM A48 Class 30
3	Valve	Chrome Steel
4	Valve Seat	Chrome Steel
5	Lever	SS304
6	Bucket Clip	SS304
7	Bucket	SS304
8	Guide Pin Plate	SS304
8A	Guide Pin	SS304
9	Strainer Gasket	Steel
10	Valve Clip	SS304
11	Internal Tube	Steel Pipe
12	Gasket	SS304 + Graphite
13	Bonnet Plug	Steel
14	Strainer Plug	Steel
15	Screen	SS304
16	Thimble	SS304

DIMENSIONS

Unit : mm

Size (DN)	B	Flanged	Threaded
		C	C1
15	153	128	195
20	181	128	195
25	228	174	229
32	314	211	261
40	349	232	355
50	413	258	398

*Specification given are subject to changed without further notice.

STEAM TRAP
RANGE AND OTHER STEAM PRODUCTS

MERCOID
Tel: 03-5569 2933 (6 Lines) Fax: 03-5569 2588, 5569 2788
Email: mercoid@mercoid.com.my, valmicro@valmicro.com.my
http://www.mercoid.com.my

		APPLICATION	SPECIFICATION	
Thermostatic (Steam Trap)		**Product Features:** Reducing flash steam losses. Operation under back pressure more than 80% of inlet pressure. High resistance against water hammer. Easy maintenance. **Typical Applications:** Tracing lines, Iron, Heating equipment, Presses	Size Range Pressure Rating Working Temperature	1/2" to 4" Up to 32 Bar Up to 200ºC / 250ºC
Bimetallic (Vacuum Breakers)		**Product Features:** Reducing flash steam losses. Energy Saving. Good air venting. High resistance against water hammer. **Typical Applications:** Tracing lines, Turbines, Marine applications, Presses, Oven	Size Range Pressure Rating Working Temperature	1/2" to 2" Up to 32 Bar Up to 400ºC
Thermostatic (Vacuum Breakers)		**Product Features:** Automatically relieving or breaking unwanted vacuum condition, restoring the athmospheric pressure. Brass or stainless steel body. **Typical Applications:** Heat exchangers, Heating coils, Calorifiers, Jacketed kettles, Steam boilers	Size Range Pressure Rating Working Temperature	1/2" Up to 16 Bar (Brass) / 25 Bar (Stainless Steel) Up to 260ºC (Brass) / 400ºC (Stainless Steel)
Thermostatic (Air Eliminators)		**Product Features:** Modulating discharge Discharge condensate close to steam temperature. **Typical Applications:** Process equipment, Kettle cookers, Sterilizers, Food, chemical and laundry equipment	Size Range Pressure Rating Working Temperature	1/4" to 1/2" Up to 10 Bar Up to 150ºC
Float Type (Air Eliminators)		**Product Features:** Removing air from HVAC systems and is also suitable for non corrosive and/or dangerous liquids. Corrosion-resistant working units. **Typical Applications:** Cold and hot water systems, Air elimination and separation systems.	Size Range Pressure Rating Working Temperature	1" to 2" Up to 16 Bar Up to 200ºC / 250ºC
Float Type (Liquid Drainers)		**Product Features:** Modulating discharge. Unaffected by sudden or wide load any pressure changes. **Typical Applications:** Aftercoolers, Separators, Compressed air and gas mains	Size Range Pressure Rating Working Temperature	1/2" to 2" Up to 16 Bar Up to 250ºC
Steam Seperator (Special Equipment)		**Product Features:** Removing moisture from steam and compressed air pipelines. **Typical Applications:** Saturated and superheated steam lines	Size Range Pressure Rating Working Temperature	1/2" to 12" Up to 16/25/40 Bar Up to 200ºC

*Specification given are subject to changed without further notice.

MERCOID
Tel: 03-5569 2933 (6 Lines) Fax: 03-5569 2588, 5569 2788
Email: mercoid@mercoid.com.my, valmicro@valmicro.com.my
http://www.mercoid.com.my

BLOW DOWN VALVE
PARALLEL SLIDE TYPE
BRONZE / CAST STEEL

VARIMEX Valves® CO. LTD.

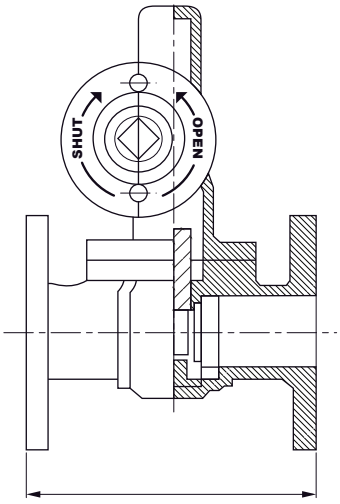

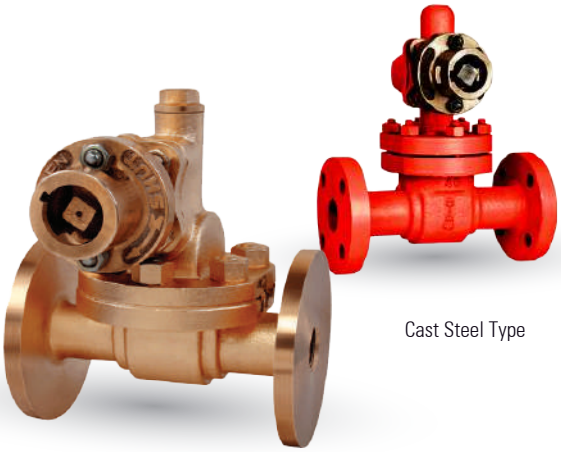

Cast Steel Type

Bronze Type

APPLICATION
Suitable for steam
(Refer to corrosion resistance table for valve materials selection).

SPECIFICATION

Size Range	1" to 3"
Body Material	Cast Steel, Bronze
Pressure Rating	Up to 25 Bar
Working Temperature	Up to 400ºC
Connection	Flanged end to ANSI 150 and 300, PN16 and PN40

MATERIAL

	Parts	Bronze	Cast Steel
1	Body	IBR Bronze Gr.B	Cast Carbon Steel
2	Bonnet		
3	Stuffing Box	IBR Bronze Gr.B	Bronze
4	Gland		
5	Rack & Pinion		
6	Body Seat & Valve Disc	Cast Monel	Cast Monel
7	Spring	Spring Steel	Spring Steel
8	Gasket	Compressed Asbestos Fibre	Compressed Asbestos Fibre
9	Gland Packing	Graphited Asbestos	Graphited Asbestos
10	Operating Key	Mild Steel	Mild Steel

DIMENSIONS

Unit : mm

Size (DN)	Bronze	Cast Steel
	F	F
25	174.5	178.0
32	178.0	242.0
40	190.5	267.0
50	206.5	305.0
65	288.5	330.0

*Specification given are subject to changed without further notice.

BLOW DOWN VALVE
RAPID ACTION / INTERMITTENT TYPE
CAST STEEL

MERCOID
Tel: 03-5569 2933 (6 Lines) Fax: 03-5569 2588, 5569 2788
Email: mercoid@mercoid.com.my, valmicro@valmicro.com.my
http://www.mercoid.com.my

ADCA STEAM EQUIPMENT

Actuator and Manual Operation Type
(*available on request)

Manual Operation Type

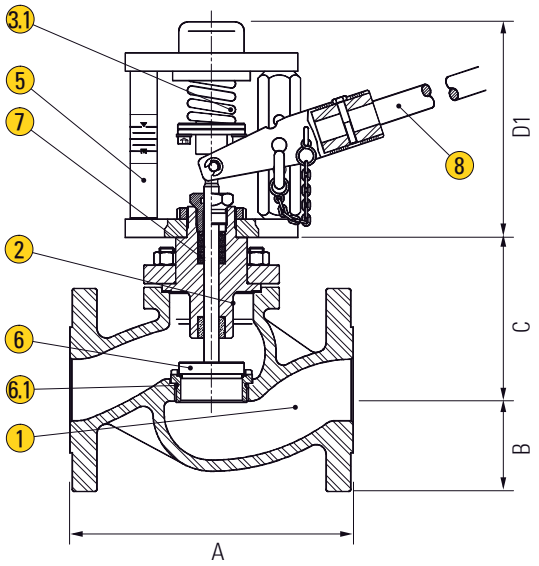

APPLICATION
Suitable for steam
(Refer to corrosion resistance table for valve materials selection).

SPECIFICATION

Size Range	3/4" to 2"
Body Material	Cast steel
Pressure Rating	Up to 25 Bar
Working Temperature	Up to 400ºC
Connection	Flanged end to ANSI 150 and 300, PN16 and PN40

MATERIAL

	Parts	Material
1	Valve Body	A216 WCB / 1.0619
2	Bonnet	CF8 / 1.4038
3	Actuator *	Steel Fe410.1 / St. Steel
3.1	Spring *	Spring Steel
4	Diaphragm *	NBR 70
5	Yoke	Carbon Steel / St. Steel
6	Valve Plug *	Hardened St. Steel
6.1	Valve Seat *	Hardened St. Steel
7	Packing	Graphite
8	Valve Lever	Stailess Steel / 1.4301

* Available spare parts.

DIMENSIONS - VALVE BODY

Unit : mm

Size (DN)	A	B	C	D1	* Weight (Kg)	** Weight (Kg)
20	150	53	80	175	15	12
25	160	58	85	175	16	13
32	180	70	90	175	20	17
40	200	75	95	175	25	22
50	230	83	105	175	24	31

Note : * Valve with pneumatic actuator, ** Valve with manual lever only

*Specification given are subject to changed without further notice.

CONTROL VALVE

PNEUMATIC | ELECTRIC | TEMPERATURE ACTUATED & ACCESSORIES

Pneumatic (Diaphragm/ Cylinder), Electric Motorized and Hydraulic

Pneumatic actuators (Diaphragm / Cylinder) use air pressure on either one or both sides of a diaphragm/ cylinder to provide the force to position the valve. Electric motorized actuators consist of reversible electric motors connected to the valve stem through a gear train that reduces rotational speed and increases torque.

Hydraulic actuators use a pressurized liquid on one or both sides of a piston to provide the force required to position the valve.

Quarter Turn Actuated & Accessories

A quarter-turn type actuator produces torque to provide rotary motion to operate a quarter-turn valve. A pneumatic actuator may be arranged to be spring-closed or spring-opened, with air pressure overcoming the spring to provide movement. A "double acting" actuator use air applied to different inlets to move the valve in the opening or closing direction.

Self Acting Temperature Control

Self-acting temperature control valve require no external power sources and are ideal for regulating the temperature of tanks, process streams and various types of industrial equipment.

Solenoid Valve

Solenoid actuators have a magnetic slug attached to the valve stem. The force to position the valve comes from the magnetic attraction between the slug on the valve stem and the coil of the electromagnet in the valve actuator.

Angle Seat Valve

An angle seat piston valve is a pneumatically-controlled valve with a piston actuator providing linear actuation to lift a seal off its seat. The seat is set at an angle to provide the maximum possible flow when unseated. Angle seat piston valves are particularly suited to applications where high temperatures and large flowrates are required, such as steam or water. When used in reverse some models of angle seat piston valve will eliminate water hammer when operated.

CONTROL VALVE

PNEUMATIC DIAPHRAGM / PNEUMATIC CYLINDER / ELECTRIC MOTORIZED / ELECTRO-HYDRAULIC

CARBON STEEL / ALLOY STEEL / STAINLESS STEEL

MERCOID
Tel: 03-5569 2933 (6 Lines) Fax: 03-5569 2588, 5569 2788
Email: mercoid@mercoid.com.my, valmicro@valmicro.com.my
http://www.mercoid.com.my

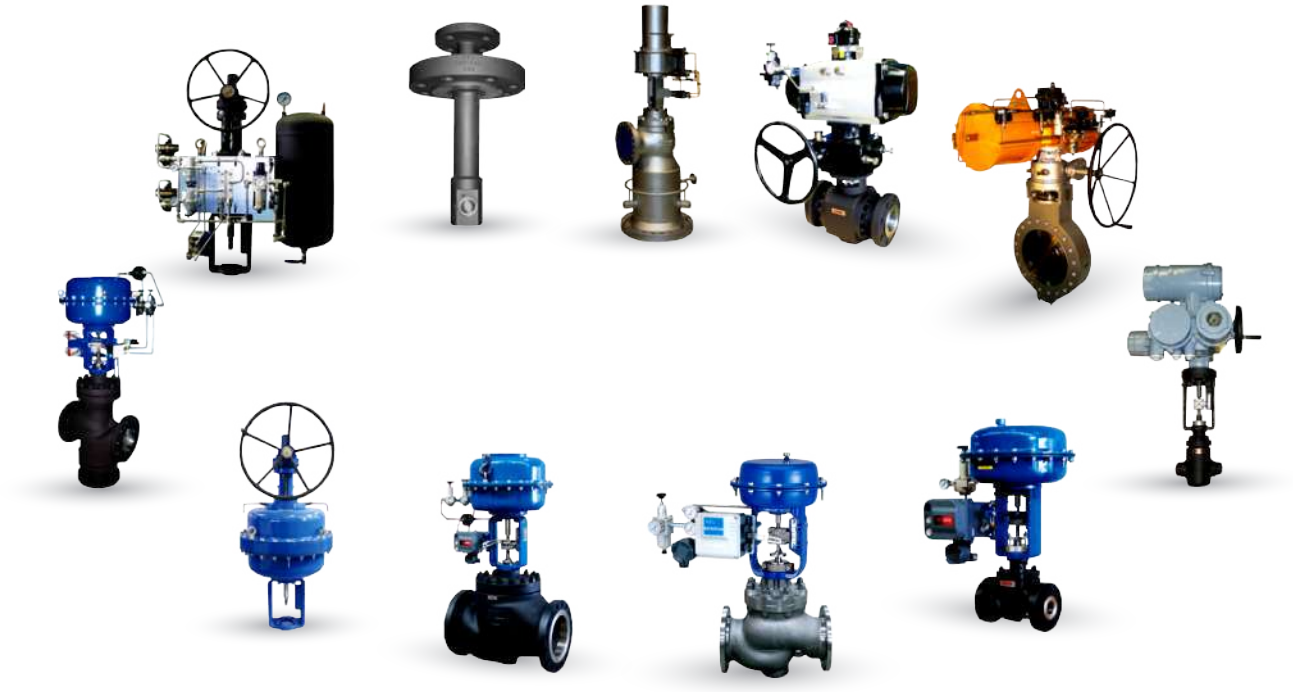

APPLICATION

Suitable for water, steam, oil, gases, abrasive and non-abrasive media
(Refer to corrosion resistance table for valve materials selection).

SPECIFICATION

Size Range	1/2" to 24"
Design Standard	ANSI B16.34 and ASME Section VIII
Face to Face	According to ISA S75.03 1984
Body Material	Carbon steel, A216 WCB, St. Steel CF8, CF8M, CF3, CF3M
Pressure Rating	Class 150# (JIS 10K, PN10), Class 300# (JIS 20K, PN16 and PN25), Class 600# (JIS 30K to 40K, PN40)
Bonnet Type	Plain (-17ºC to 230ºC), Extension (-45ºC to -17ºC, >230ºC), Cryogenic (-196ºC to -45ºC)
Flow Characteristic	Equal %, Linear, Quick opening
Rangeability	10:1 to 100:1
Leakage Class	Metal seat - Rated ANSI Class IV,V, Soft seat - Rated ANSI Class V,VI
Connection	Screwed, Socket weld, Butt weld, Flanged end, ANSI, DIN and JIS

STANDARD BODY SPECIFICATION

Body Style	Straight Way (2 way globe) / Angle type / Botom flanged 3 way / Top flanged 3 way
Bonnet	Plain (Standard) / Fin & Extensions / Bellows seal / Long extensions (Cryogenic service)
Size Range	1/2" to 24" (DN 15 to DN 600)
Pressure Rating	ANSI 150 Lb to 250 Lb JIS 10K to JIS 180K PN20 to PN420
Operating Pressure Range	Up to 4000 Psi (g) / Up to 280 Kg/cm² (g)
Operating Temperature Range	-58ºF to +1050ºF / -50ºC to +565ºC Option : -320ºF to +1562ºF / -192ºC to + 850ºC
End Connection	Socket weld - ANSI B16.11 Butt weld - ANSI B16.25 FF/RF/RTJ flange - ANSI B16.5 Option : JIS flange, DIN flange, NPT/PT screw
Materials	Carbon Steel (WCB, WCC, A105) Chrome-moly Steel (WC6, WC9, C12A, F11,F22, F91) Stainless Steel (CF8, CF8M, CF3, CF3M, F304, F304L, F310, F316L) Duplex Stainless Steel, Monel, Al Bronze, Inconel 625, Hastelloy B/C, other Alloy
Actuator	Pneumatic diaphragm, Pneumatic cylinder, Electric motorized, Electro-hydraulic

*Specification given are subject to changed without further notice.

MERCOID
Tel: 03-5569 2933 (6 Lines) Fax: 03-5569 2588, 5569 2788
Email: mercoid@mercoid.com.my, valmicro@valmicro.com.my
http://www.mercoid.com.my

CONTROL VALVE

CONTROL VALVE
QUARTER TURN ACTUATOR

NUTORK® Actuators & Valve

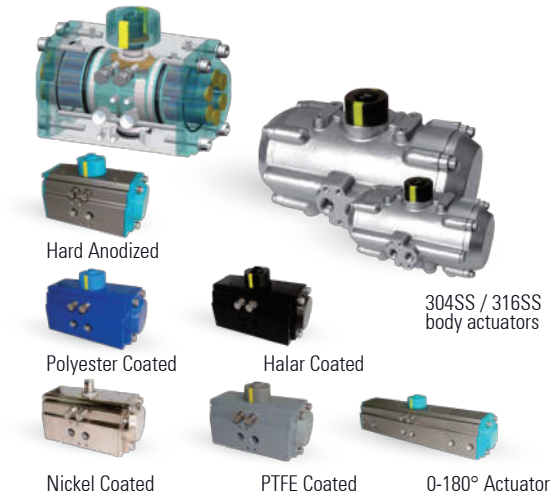

RACK & PINION TYPE MATERIAL IN ALUMINUM ALLOY / 304SS / 316SS PNEUMATIC ACTUATOR

Certificated by CE-ATEX/SIL3
Aluminum Alloy body actuators range consist of 17 models with output torque from 9 Nm to 9,337 Nm at 6 bar air supply.

304SS / 316SS body actuators range consist of 8 models with torque from 24 Nm to 1,596 Nm at 6 bar air supply.

Bottom drilling complies with ISO5211/DIN3337 to match the valve. Drilling for assembling accessories are in accordance with VDI/VDE 3845(NAMUR standard) and ± 5°stroke adjustment.

Aluminum Alloy actuator body & piston are over 30um hard anodized treatment and over 100um epoxy coated on end caps, and external bolts use 304SS. Which meet ASTM B117 certification (salt spread test over 1,000 hours and no corrosion).

*Specification given are subject to changed without further notice.

CONTROL VALVE
QUARTER TURN ACTUATOR

MERCOID
Tel: 03-5569 2933 (6 Lines) Fax: 03-5569 2588, 5569 2788
Email: mercoid@mercoid.com.my, valmicro@valmicro.com.my
http://www.mercoid.com.my

NUTORK® Actuators & Valve

Pneumatic Actuator
Single Acting Type

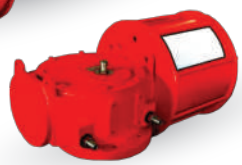

Pneumatic Actuator
Double Acting Type

Scotch & Yoke Actuator

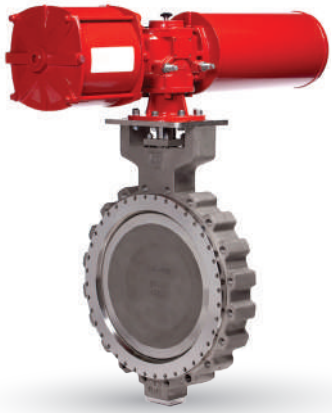

Hydraulic Actuator
Single Acting Type

SCOTCH YOKE TYPE PNEUMATIC & HYDRAULIC ACTUATOR

Certificated by CE-ATEX/SIL3
The pneumatic & hydraulic actuators range consist of 10 sizes actuator frame with different sizes piston with output torque from 600 Nm to 226,000 Nm.

Bottom drilling complies with ISO5211/DIN3337 to match the valve. Top drilling are in accordance with VDI/VDE3845 (NAMUR standard) and ± 10° stroke adjustment.

The ductile iron actuator frame & carbon steel piston, Removable modules design, Anti-corrosive painting, The inner surface of cylinder is coated by PTFE. Pre-loaded spring module, Rollers be used between the yoke arm and pin, Replaceable bearings protect sliding and rotating components.

The hydraulic override & manual override are optional.

NUTORK® Actuators & Valve

FLOWINN

IP67 enclosure (standard), IP68 (Tested at 30meters @24hours)
& ExdIIBT6 (certificated by ATEX)

Approved by:
LVD - Low Voltage Directive 2006/95/EC
MD - Machinery Directive 2006/42/EC
EMC – Electromagnetic Compatibility Directive 2004/108/EC

QUARTER TURN ELECTRIC ACTUATOR

SIL3 Approval
15 models, The output torque from 50 Nm up to 6,000 Nm.

Bottom drilling complies with ISO5211 / DIN3337. Hard anodized treatment on both inside and outside of the housing coated with epoxy.

Manual override auto declutch mechanism, Self-lock gear mechanism.

Power supply : 1Ph/220VAC or 3Ph/380VAC as standard (Optional in 1ph/110VAC, 3ph/440VAC, 24VDC/VAC)
Control power supply : 24VDC or 220VAC.

Standard accessories : Anti condensation space heater, Auxiliary limit switches, Auxiliary torque switches.

Local control unit is optional. Mobus, Profibus, Canbus, Fail Safe ...etc. is optional

*Specification given are subject to changed without further notice.

MERCOID
Tel: 03-5569 2933 (6 Lines) Fax: 03-5569 2588, 5569 2788
Email: mercoid@mercoid.com.my, valmicro@valmicro.com.my
http://www.mercoid.com.my

CONTROL VALVE
QUARTER TURN ACTUATOR

NUTORK® Actuators & Valve
FLOWINN

IP67 enclosure (standard), IP68 (Tested at 30meters @24hours)

Approved by:
LVD - Low Voltage Directive 2006/95/EC
MD - Machinery Directive 2006/42/EC
EMC – Electromagnetic Compatibility Directive 2004/108/EC

QUARTER TURN ELECTRIC ACTUATOR

SIL3 Approval
14 models, The output torque from 20 Nm up to 6,000 Nm.

Bottom drilling complies with ISO5211/DIN3337. The epoxy coated body, Detachable crank Allen wrench, self lock gear mechanism

Power supply : 1Ph/220VAC or 3Ph/380VAC as standard (Optional in 1ph/110VAC, 3ph/440VAC, 24VDC/VAC)
Control power supply : 24VDC or 220VAC.

Optional accessories : Anti condensation space heater, Auxiliary torque switches. Local Control Unit Handwheel

Mobus, Profibus, Canbus, Fail Safe ...etc. is optional
IP67 enclosure (standard)
IP68 is optional.

CONTROL VALVE
QUARTER TURN ACTUATOR ACCESSORIES

NUTORK® Actuators & Valve

Static Seal Design

316SS

3/2 & 5/2 WAY IN-LINE & NAMUR MOUNTED SOLENOID VALVE

IEC/ATEX/FM/CSA Approved
- Spool valve structure
- Static seal design
- Material in aluminium alloy & 316SS
- Encapsulated coil in NASS coil
- EExdIICT6 coil enclosure in aluminium alloy & 316SS EExdIICT6 approved by ATEX

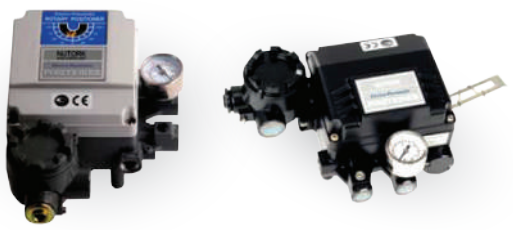

ROTARY & LINEAR TYPE E/P POSITIONER

NEPSI Approved
- The optional output signal:
  Mechanical switch & 4-20m ADC feedback
- The optional accessories:
  Air filter regulator or dome type indicator (only in IP66, rotary type)
- Enclosure in IP66, EExdIIBT6 & EExdIICT6 (approved by NEPSI)

*Specification given are subject to changed without further notice.

CONTROL VALVE
QUARTER TURN ACTUATOR ACCESSORIES

MERCOID
Tel: 03-5569 2933 (6 Lines) Fax: 03-5569 2588, 5569 2788
Email: mercoid@mercoid.com.my, valmicro@valmicro.com.my
http://www.mercoid.com.my

NUTORK® Actuators & Valve

IP67 Enclosure (Standard)
IP68 (50M@72hrs tested by SGS)

IP67

316SS / ExdIIBT6
(ATEX Approved)

IP68 (30M@24hrs tested by TUV
ExdIIBT6 (ATEX Approved)

ExdIIBT6
(ATEX Approved)

POSITION MONITORING SWITCHBOX

ATEX Approved
- Sensor type:
  - Mechanical type (2,3 or 4 x SPDT, DPDT)
  - Proximity type (Autonics, P+K, Truck...)
- The optional output signal:
  4-20m ADC or 0-5K/10K ohm potentiometer
- Housing material in aluminium alloy or 316SS
- Enclosure in IP67, ExdIIBT6 & ExdIICT6 ATEX approved)
- IP68 enclosure tested in 30M/24hrs by TUV & 50M/72hrs by SGS

Max output torque 70,000Nm

MANUAL OVERRIDE (DECLUTCHABLE WORMGEAR OPERATOR)

- Cast iron / Aluminium alloy body
  The output torque: 300 / 700 / 1200 / 3100Nm
- Ductile iron body
  The output torque: 8500 / 12000 / 18000 / 25000 / 32000 / 70000Nm
  The actuators & valve connection complies with ISO5211 standard

316SS 316SS

AIR FILTER REGULATOR

NEPSI Approved
- 5um filtration & high flow capacity
- Panel mounting is optional
- 1/4" vented spring case is optional
- Housing material in aluminium alloy & 316SS
- Conn. size: 1/4" ~ 1"

SPEED CONTROLLER

Features
The speed controller is installed on actuators such as cylinders and air motors and controlsto adjust the flow through the actuator.

MUFFLER / SILENCER

Features
Mufflers are designed to attenuate the exhaust noise caused by control of pneumatic lines. In general, mufflers are mounted on the exhaust ports of solenoid valve, directional control valves and so on, to reduce exhaust noise when direction is changed. This contributes to overall noise reduction in plants.

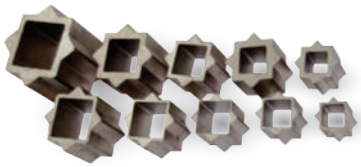

STAR REDUCING ADAPTOR (STEEL ALLOY WITH ENP)

Features
Reductions for assembling the actuators on top of the valve.

PNEUMATIC FITTINGS (PU / BRASS / STAINLESS STEEL)

Features
Pneumatic fittings are parts used to connect sections of pipe, tube, and hose in pneumatic (pressurized gas) systems. Compared to hydraulic fittings, pneumatic fittings are typically characterized by tighter seals and lower pressure requirements.

*Specification given are subject to changed without further notice.

MERCOID
Tel: 03-5569 2933 (6 Lines) Fax: 03-5569 2588, 5569 2788
Email: mercoid@mercoid.com.my, valmicro@valmicro.com.my
http://www.mercoid.com.my

CONTROL VALVE
SELF ACTING TEMPERATURE CONTROL
DUCTILE IRON / CAST IRON

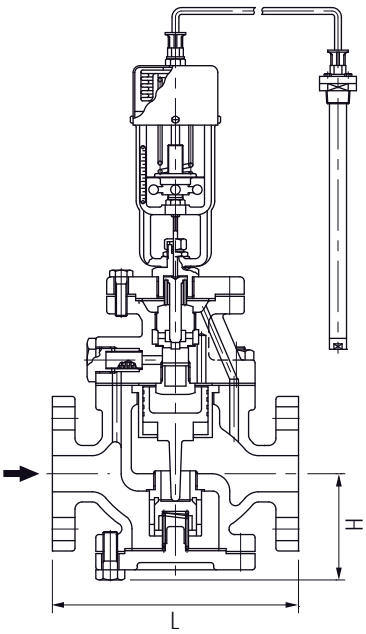

APPLICATION
Suitable for water, steam, oil, gases and others non-abrasive media (Refer to corrosion resistance table for valve materials selection).

SPECIFICATION

Size Range	1/2" to 12"
Valve Range	2-way and 3-way
Design Construction	Single seated, Single seated pressure balance and double seated designed
Connection	Threaded end, Flanged end to DIN PN16, PN25, PN40

PRODUCT FEATURE

Working Pressure (kgf/cm²)	Max 10
Temperature Range (°C)	40 ~ 120
Working Temperature (°C)	220
Valve Type	Pilot Acting
Connection	JIS 10K Flanged
Capillary Tube Length	2M, 3M, 5M
Materials	Body : Ductile Iron, Cast Iron Trim : Stainless Steel Sensor : Copper Tube

DIMENSIONS
Unit : mm

Part / Size (DN)	15	20	25	32	40	50	65	80	100
L	165	165	170	200	200	220	250	290	320
H1	75	75	75	85	85	92	110	130	150

ADJUSTING RANGE
Unit : °C

Adjusting (°C)	40 ~ 60	50 ~ 70	60 ~ 80	70 ~ 90	80 ~ 100
Max (°C)	70	80	90	100	110

*Specification given are subject to changed without further notice.

SOLENOID VALVE

MERCOID
Tel: 03-5569 2933 (6 Lines) Fax: 03-5569 2588, 5569 2788
Email: mercoid@mercoid.com.my, valmicro@valmicro.com.my
http://www.mercoid.com.my

MINIATURE & HIGH PRESSURE SOLENOID VALVE

2/2 WAY MINIATURE - DIRECT ACTING AND HIGH PRESSURE SOLENOID VALVE

Normally Closed or Normally Open Type

Connection	Thread 1/8" - 1/2"
Body Material	Brass, Stainless Steel, Plastic
Working Pressure	0 - 170 Bar

GENERAL SOLENOID VALVE

2/2 WAY ZERO DIFFERENTIAL PRESSURE - DIRECT ACTING SOLENOID VALVE

WITH WIRE TYPE / DIN TYPE

Normally Closed Type or Normally Open Type

Connection	Thread 1/8" - 2"
Flanged	1" - 8"
Body Material	Brass, Cast Iron, Stainless Steel
Working Pressure	0 - 10 Bar

HIGH TEMPERATURE STEAM SOLENOID VALVE

2/2 WAY - PISTON SOLENOID VALVE FOR HOT WATER , STEAM

Normally Closed or Normally Open Type

Connection	Thread 1/4" - 2"
Flanged	1" - 8"
Body Material	Brass, Stainless Steel
Working Pressure	0.1 - 16 Bar
Working Temperature	0ºC - 180ºC

SPECIAL-PURPOSE SOLENOID VALVE

2/2 WAY CORROSION RESISTANT SOLENOID VALVE

PTFE / CPVC / UPVC PISTON TYPE

Normally Closed or Normally Open Type

Connection	Thread 3/8" - 2" and Flange DN15 - DN200
Body Material	PTFE / CPVC / UPVC
Working Pressure	0.1 - 6 Bar
Working Temperature	-5ºC - 130ºC

EXPLOSION-PROOF FLAMEPROOF SOLENOID VALVE

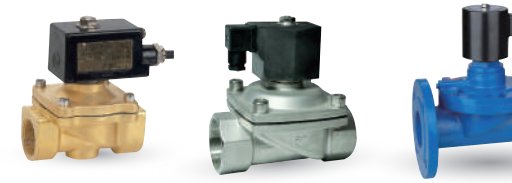

2/2 WAY EXPLOSION-PROOF FLAMEPROOF SOLENOID VALVE

Normally Closed or Normally Open Type

Connection	Thread 3/8" - 2" and Flange DN15 - DN200
Body Material	Brass, Cast Iron, Stainless Steel
Working Pressure	0 - 16 Bar
Working Temperature	-5ºC - 130ºC

*Specification given are subject to changed without further notice.

MERCOID
Tel: 03-5569 2933 (6 Lines) Fax: 03-5569 2588, 5569 2788
Email: mercoid@mercoid.com.my, valmicro@valmicro.com.my
http://www.mercoid.com.my

ANGLE SEAT VALVE
SINGLE / DOUBLE ACTING
PA / ALUMINIUM / STAINLESS STEEL

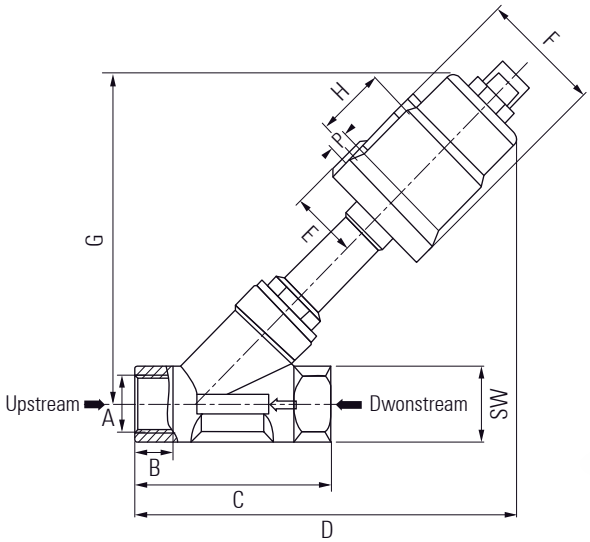

APPLICATION
Suitable for water, steam, oil, gases and non-abrasive media
(Refer to corrosion resistance table for valve materials selection).

SPECIFICATION

End Connection	Female thread
Pressure Rating	Up to 25 Bar
Working Temperature	Up to 200ºC

PRODUCT FEATURE

Model Specification	Normally Closed	P010NC	P015NC	P020NC	P025NC	P032NC	P040NC	P050NC	P065NC	P080NC
	Normally Open	P010NO	P015NO	P020NO	P025NO	P032NO	P040NO	P050NO	P065NO	P080NO
Material of Body		Gun Metal / SS304 / SS316 / SS316L								
Material of Actuator		PA / Aluminium / Stainless Steel								
Operating Method		Plunger Pilot								
Ambient and Fluid		Air, Water, Oil, Steam (50CTS Bellow)								
Port Size		3/8″	1/2″	3/4″	1″	1-1/4″	1-1/2″	2″	2-1/2″	3″
Seat Seal		PTFE / FPM								
Stem Seal		PTFE / FPM								
Piston Seal		PTFE / FPM / NBR								
Tempreture of Medium	PTFE	-10 ~ 200ºC								
	FPM	-10 ~ 150ºC								
Installing		Downstream / Upstream								

DIMENSIONS

Unit : mm

Size			A	B	C	D	E	F	G	H	P	SW
Port	DN	Actuator										
3/8″	10	40	G3/8	12	65	144	28	53	105	38	G1/8	25
		50	G3/8	12	65	144	35	56	105	38	G1/8	25
1/2″	15	40	G1/2	14	76	157	28	53	113	38	G1/8	28
		50	G1/2	14	76	182	35	56	142	38	G1/8	28
3/4″	20	50	G3/4	16	92	189	35	56	152	38	G1/8	32
		63	G3/4	16	92	189	43	70	152	44	G1/8	32
1″	25	50	G1	21	103	207	35	56	155	38	G1/8	39
		63	G1	21	103	217	43	70	176	44	G1/8	39
1-1/4″	32	63	G1-1/4	19	112	222	43	70	177	44	G1/8	49
1-1/2″	40	63	G1-1/2	21	129	225	43	70	182	44	G1/8	56
2″	50	63	G2	27	143	249	43	70	196	44	G1/8	68
		90	G2	27	143	268	56	94	206	67	G1/4	68
2-1/2″	65	90	G2-1/2	28	186	290	56	94	215	67	G1/4	84
3″	80	125	G3	34	218	335	73	135	295	67	G1/4	101

*Specification given are subject to changed without further notice.


20
10
30
0
bar
40
KL.1.0
BADOTHERM

FLOW | LEVEL

Flow

A flow meter is a device used to measure the volume or mass of a gas or liquid. Flow meter are referred to by many names, such as flow gauge, flow indicator, liquid meter, flow rate sensor, etc. depending on the particular industry. However, they all measure flow. Open channels, like rivers or streams, may be measured with flow meter. Or more frequently, the most utility from a flow meter and the greatest variety of flow meter focus on measuring gasses and liquids in a pipe. Improving the precision, accuracy, and resolution of fluid measurement are the greatest benefits of the best flow meter.

Level

Level indicator are devices used in the measurement of level of fluids at various industrial applications. These devices are used to determine the level of liquid in tanks, drums, pressure vessels etc. There are many level indicator to suit the needs of different applications. Normally, fluids are used in many forms in highly commercial industries. For example, in the process industry, tubular level indicator are used for better visual liquid level indication. If it is for non-contact type level measurement, then radar type indicator or ultrasonic type indicator are to be used.

Types of Level Indicator

There are many different types of level indicator, each with its own application.

- Transparent level indicator are highly useful in chemical industries and petrochemical fertilizers. As the fluid is stored in high pressure and high temperature, the transparent level indicator is very useful to find the fluid level.

- Reflex level indicator are for applications that involve high temperature, high pressure and use of corrosive fluids. The colorless fluid used in this apparatus gives better clarity to level indication.

- Magnetic level indicators are red followers that need magnetic level indicator. Cylindrical floats and powerful magnets are used to find the level of the fluid. The float movement is followed by magnetic capsules, and thus, the level in indicated. This type of indicator has good visibility and is absolutely safe to use as it contains non-fragile metal chamber.

Some other level indicator for reference are tubular level indicator, float and board level indicator, sight flow indicator, window type sight flow indicator, manometer and bi-color indicator. Some of the level indicator are provided with various features, such as a built-in controller, continuous output measurement, and adjustable alarm switches.

FLOW - WATER
HOT AND COLD WATER METER
CAST IRON

MERCOID
Tel: 03-5569 2933 (6 Lines) Fax: 03-5569 2588, 5569 2788
Email: mercoid@mercoid.com.my, valmicro@valmicro.com.my
http://www.mercoid.com.my

APATOR POWOGAZ

Threaded Type

Flanged Type

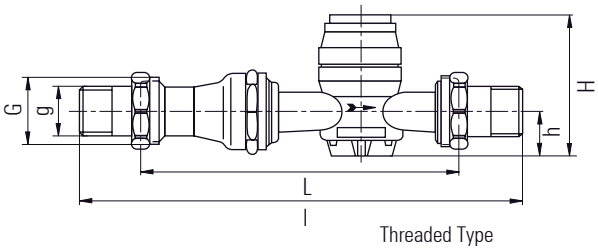

Threaded Type

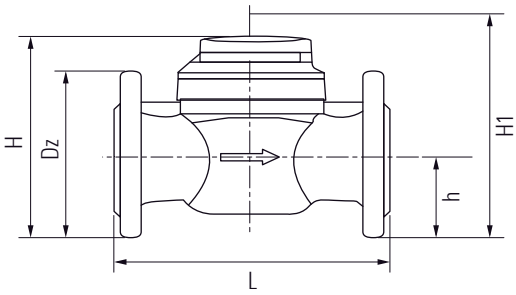

Flanged Type

APPLICATION
Suitable for hot water
Suitable for cold water

SPECIFICATION

Size Range	1/2" to 1-1/2" (Threaded) 1-1/2" to 12" (Flanged)
Body Material	Cast iron
Pressure Rating	Up to 16 Bar
Working Temperature	Up to 130°C (Hot) Up to 50°C (Cold)
Connection	Threaded and Flanged end

PRODUCT FEATURE - THREADED TYPE

Norminal Diameter		DN	mm	25	32	40	25	32	40
Maximum Flow Rate	Hot & Cold	q_s	m³/h	For hot water up to 130°C			For cold water up to 50°C		
				7	12	20	7	12	20

DIMENSIONS - THREADED TYPE

Unit : mm

Size (DN)		L	l	H	h	g	G	Weight (Kg) - Without Connectors
25	For hot water up to 130°C	260	400	110	40	1	1-1/4	2.2
32		260	400	110	40	1-1/4	1-1/2	2.6
40		300	438	110	40	1-1/2	2	2.8
25	For cold water up to 50°C	260	400	110	40	1	1-1/4	2.2
32		260	400	110	40	1-1/4	1-1/2	2.6
40		300	438	110	40	1-1/2	2	2.8

PRODUCT FEATURE - FLANGED TYPE

Norminal Diameter		DN	mm	40	50	65	80	100	125	150	200	250	300
Maximum Flow Rate	Hot	q_s	m³/h	30	30	60	90	140	200	300	500	1000	1200
	Cold	q_s	m³/h	60	90	120	200	300	350	600	1000	1600	2000

DIMENSIONS - FLANGED TYPE

Unit : mm

Size (DN)	L	h	H	**H1	Dz	Weight (Kg)
40	200	65	177	277	150	7.9
50	200	72	187	287	165	9.9
65	200	83	197	297	185	10.6
80	*200 / 225	95	219	339	200	13.3
100	250	105	229	349	220	15.6
125	250	120	257	377	250	18.1
150	300	135	357	582	285	40.1
200	350	160	382	607	340	51.1
250	450	193	427	652	400	75.1
300	500	230	497	722	460	103.1

Note : * On request , ** Space for measuring insert removal

*Specification given are subject to changed without further notice.

MERCOID
Tel: 03-5569 2933 (6 Lines) Fax: 03-5569 2588, 5569 2788
Email: mercoid@mercoid.com.my, valmicro@valmicro.com.my
http://www.mercoid.com.my

FLOW - OIL FLOW METER

CAST IRON / CAST STEEL / STAINLESS STEEL

DONG YANG (KOREA) 동양계기교역주식회사 Darhor®


Digital Display


High Temperature


Basic Counter


Counter with 4-20mA/pulse


Pulse Signal


Zero Reste Counter


Oil Meter BSP End


Oil Meter BSP End

APPLICATION

Suitable for fluid light oil, diesel, crude palm oil & etc. (Refer to corrosion resistance table for valve materials selection).

SPECIFICATION

Size Range	1/2" to 8"
Body Material	Cast iron, Cast steel, Stainless steel
Pressure Rating	Cast Iron (PN10, PN16, ANSI 150#, JIS 10K) Cast Steel (PN16, PN40, ANSI 150# and 300#, JIS 10K and 20K) Stainless Steel 304/316 (PN10, PN16, ANSI 150#, JIS 10K)
Teperature Rating	Max 100ºC (180ºC on request)
Viscosity	Up to 5000 Cp (cP = mPa.s)
Connection	PN10, PN16, PN40, ANSI 150 and 300, JIS 10K and 20K

PRODUCT FEATURE

Body Material	Cast Iron		Cast Steel			Stainless Steel	
Pressure (Mpa)	1.0	1.6	2.5	4.0	6.4	1.0	1.6
Liquid Temperature	-20ºC ~ +100ºC						
Flange	PN10, PN16, PN40, ANSI 150 & 300, JIS 10K & 20K						
Liquid Viscosity (Mpa-s)	0.3 - 2mpa.s		2 - 8mpa.s			8 - 200mpa.s	
DN10	0.2 - 0.4	0.08 - 0.4	0.1 - 0.4	0.08 - 0.4		0.08 - 0.4	0.04 - 0.4
DN15	0.75 - 1.5	0.3 - 1.5	0.3 - 1.5	0.3 - 1.5		0.3 - 1.5	0.15 - 1.5
DN20	1 - 3	0.4 - 3	0.6 - 3	0.4 - 3		0.5 - 3	0.3 - 3
DN25	2 - 6	0.8 - 6	1.2 - 6	0.8 - 6		1 - 6	0.6 - 6
DN40	5 - 15	2 - 15	3 - 15	2 - 15		2.5 - 15	1.5 - 15
DN50	8 - 24	3 - 24	4.8 - 24	3 - 24		4 - 24	2.4 - 24
DN65	15 - 40	5 - 40	8 - 40	5 - 40		6 - 40	4 - 40
DN80	20 - 60	6 - 60	12 - 60	6 - 60		10 - 60	6 - 60
DN100	34 - 100	10 - 100	20 - 100	10 - 100		16 - 100	10 - 100
DN150	64 - 190	19 - 190	38 - 190	19 - 190		32 - 190	19 - 190
DN200	114 - 340	34 - 340	68 - 340	34 - 340		56 - 340	34 - 340
Accuracy	0.2%	0.5%	0.2%	0.5%		0.2%	0.5%

*Specification given are subject to changed without further notice.

FLOW - STEAM
FLOW METER (VORTEX TYPE)
SS304 / SS316

MERCOID
Tel: 03-5569 2933 (6 Lines) Fax: 03-5569 2588, 5569 2788
Email: mercoid@mercoid.com.my, valmicro@valmicro.com.my
http://www.mercoid.com.my

DONG YANG (KOREA) 동양계기교역주식회사 Darhor®

Gas / Steam P&T Compensation Intelligen Vortex Flowmeter

Saturated Steam Temperature Compensation Vortex

Saturated Steam Temperature Compensation Vortex Flowmeter

Instantanneous Flow & Dismounting Vortex Flowmeter

APPLICATION
Suitable for saturated steam, superheated stean, etc.
(Refer to corrosion resistance table for valve materials selection).

SPECIFICATION

Size Range	1/2" to 20"
Body Material	SS304 and SS316
Pressure Rating	PN10, PN16,PN25 and PN40 ANSI 150#, 300# and 600# JIS 10K, 20K and 40K
Working Temperature	Up to 420ºC
Connection	PN10, PN16,PN25 and PN40 ANSI 150#, 300# and 600# JIS 10K, 20K and 40K

PRODUCT FEATURE

Size	1/2" to 20"
Material	Stainless Steel 301 (Wafer type only) , Stainless Steel 304, Stainless Steel 316
Process Connection	Wafer Type, PN10, PN16, PN25, PN40, ANSI 150#, ANSI 300#, ANSI 600#, JIS 10K, JIS 20K, JIS 40K, Others
Function	Display (without Temperature / Pressure compensation) Display + Pressure + Temperature calculation Display + Temperature sensor *Note Display + Pressure sensor *Note Display + Pressure / Temperature sensor *Note
Output	4 - 20mA (2 Wire) Battery power (Display only, without output) Scale pulse output (3 Wire) Rs485 Communication + Scale pulse output (3 Wire)
Max. Temperature	-40ºC to 280ºC -40ºC to 320ºC -40ºC to 330ºC (Under pressure replacing sensor) -40ºC to 420ºC (Under pressure replacing sensor)
Protection Class	Intrinsically safe, Eex ia IIC T4 Explosion proof, Exd IIC T6
Installation	Compact, Remote type with 10M cable
Option	None, Reducing bore type, Cable entry 1/2" Nptf

*Specification given are subject to changed without further notice.

MERCOID
Tel: 03-5569 2933 (6 Lines) Fax: 03-5569 2588, 5569 2788
Email: mercoid@mercoid.com.my, valmicro@valmicro.com.my
http://www.mercoid.com.my

FLOW - AIR FLOW METER

ACRYLIC / POLYSULPHONE / GLASS

DONG YANG (KOREA) 동양계기교역주식회사

Darhor®

Acrylic Type

Polysulphone Type

Glass Type

PRODUCT FEATURE

Material		Acrylic	Polysulphone	Glass
Service		Compatible gases and liquids		
Wetted Materials	Body	Acrylic	Polysulphone	Glass
	Metal Parts	Brass, Stainless Steel, etc.		
	Float	Stainless Steel, Agate ball, PTFE, etc.		
Preassure		Up to 10 Bar		
Temperature		Up to 150ºC		
Accuracy		Up to 1% of full scale		
Mounting Orientation		Mounting vertical position		
Range		l/h or Nm³/h		

*Specification given are subject to changed without further notice.

FLOW METAL TUBE ROTAMETER & TURBINE FLOW METER

MERCOID
Tel: 03-5569 2933 (6 Lines) Fax: 03-5569 2588, 5569 2788
Email: mercoid@mercoid.com.my, valmicro@valmicro.com.my
http://www.mercoid.com.my

DONG YANG (KOREA) 동양계기교역주식회사

Darhor®

METAL TUBE ROTAMETER

REGULAR TYPE

Direct Indicating

LCD Display

Horizontal Installation

CUSTOMIZE

Krohne Type

TURBINE FLOWMETER

*Specification given are subject to changed without further notice.

MERCOID
Tel: 03-5569 2933 (6 Lines) Fax: 03-5569 2588, 5569 2788
Email: mercoid@mercoid.com.my, valmicro@valmicro.com.my
http://www.mercoid.com.my

FLOW - SWITCH

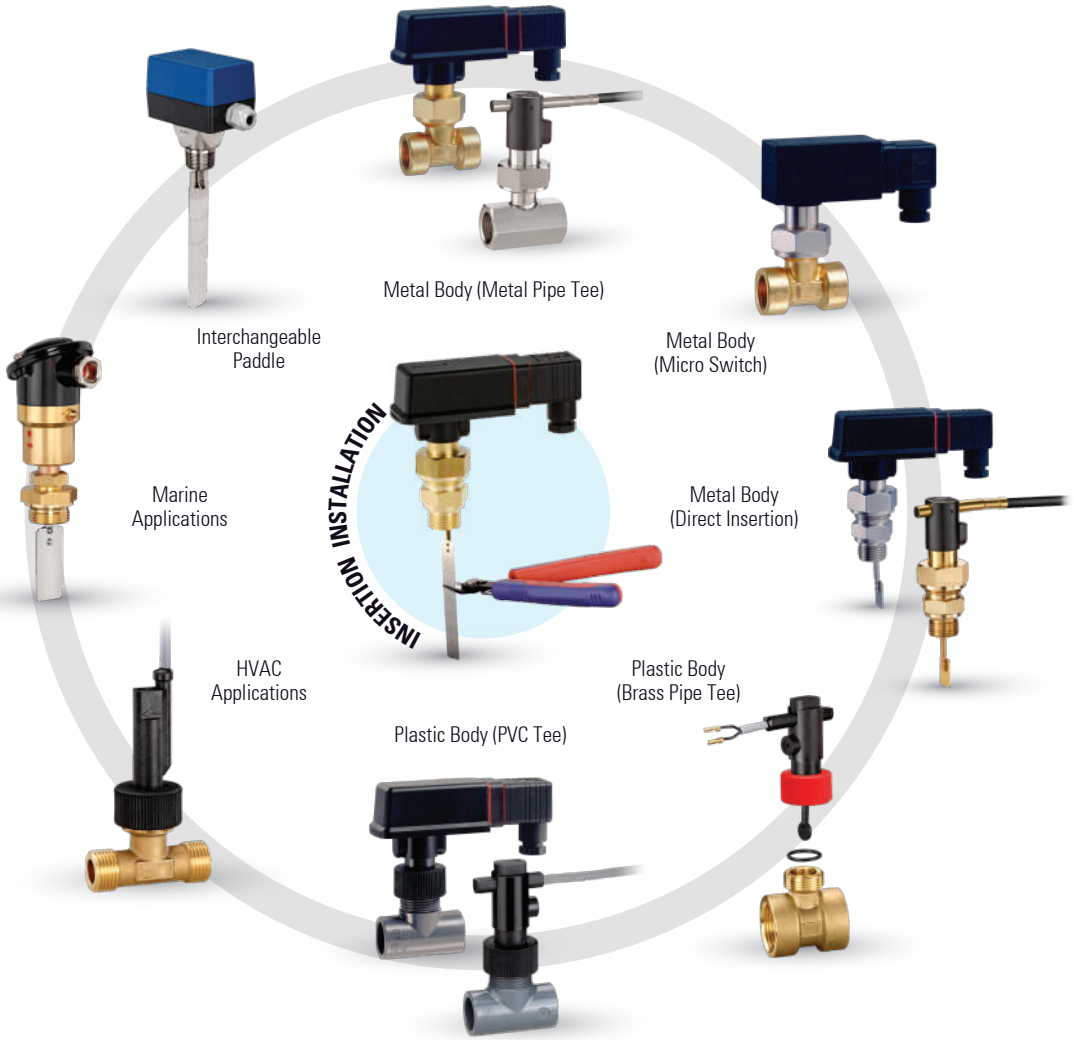

APPLICATION

Suitable for steel, chemical, shipbuilding, food, pharmaceutical, optical, hydropower, machine tool, refrigeration and air conditioning, electronics, semiconductor and other industries. Flow detection control for all types of transfer pipelines or cooling pipelines.

SPECIFICATION

Switching Function		Contact • Closes at increasing flow • Opens at decreasing flow Reversing possible
Pressure Rating		PN 25
Temperature Ranges	Medium	-25...110°C
	Ambient	-25...80°C
Switching Current		Max. 1 A
Switching Voltage		Max. 230 VAC, 48 VDC
Rating		Max. 26 VA, 20 W
Degree of Protection EN60529		IP65
Protection Class EN60730-1		Class II

Electrical Connection Standard 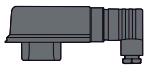	**Plug connector EN175301-803-A** incl. cable sockett
Optional Power 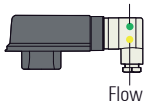 Flow	**Plug connector EN175301-803-A** incl. plug with two LED for optical flow and power indication in plug (for switching voltages 24V...230 VAC/DC) For use in potentially explosive atmospheres, max. media temperature 100°C
Optional 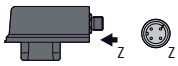	**4-pin-sensor plug** M 12x1 acc. IEC 947-5-2
Optional 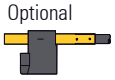	Connection cable 1.5m

MATERIAL

Parts	Material
Body	Brass, St Steel 1.4571, Plastic NORYL PPO GFN3
Paddle System	Brass, St Steel 1.4571, Plastic NORYL PPO GFN3
Pipe Section	Brass, Stainless Steel, Copper solder connection, PVC solvent bonded connection

*Specification given are subject to changed without further notice.

LEVEL - REFLEX LEVEL GAUGE

MERCOID
Tel: 03-5569 2933 (6 Lines) Fax: 03-5569 2588, 5569 2788
Email: mercoid@mercoid.com.my, valmicro@valmicro.com.my
http://www.mercoid.com.my

VARIMEX Valves® CO. LTD. HELS HOSE-EXPANSION JOINT-LEVEL CONTROL-STEAM TRAP AYVAZ

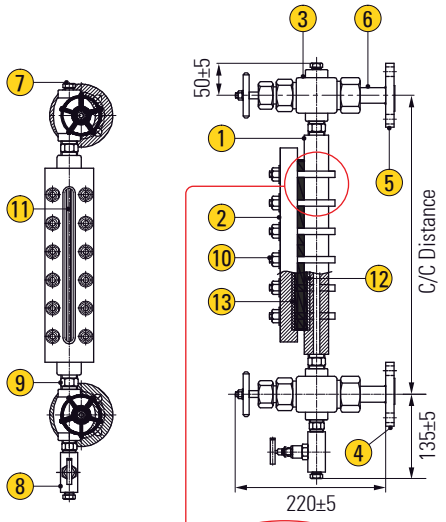

1 Liquid Chamber
2 Cover Plate
3 Isolation Valve
4 Inlet Process Flange
5 Outlet Process Flange
6 Tail Piece
7 Vent Plug
8 Drain Valave
9 Nipple
10 Fastener
11 Peflex Glass
12 Gasket
13 Cushion

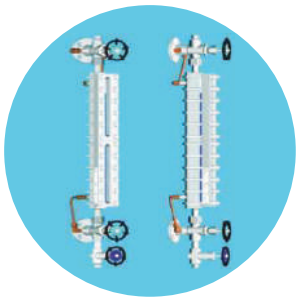

Option : Jacket Type

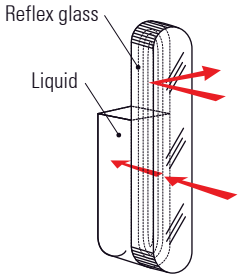

DETAIL A
(Principle of Reflex Level Glass)

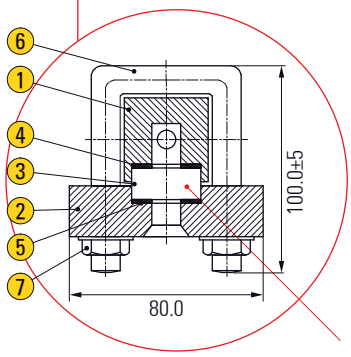

Refer to **DETAIL A**

Reflex Construction
(Sectional View)

1 Liquid Chamber
2 Cover Plate
3 Reflex Glass
4 Gasket
5 Cushion
6 "u" Bolt
7 Nuts & Washer

APPLICATION

Applicable for refinery, petrochemical, chemical, power, radioactive, fertilizer, food, pharma, metal industry applications.
(Refer to corrosion resistance table for valve materials selection).

SPECIFICATION - TECHNICAL DATA

Type of Gauge	(a) Low pressure - 30kg/cm (b) Medium pressure - 100kg/cm² (c) High pressure - 200kg/cm²
Mounting Orientation	Top - Bottom vertical Side - Side right Side - Side left Side - Side back (Right/Left)
Temperature	Up to 400ºC
CCD	Max. up to 3000mm
Liquid Chamber	In forged construction: Carbon steel, SS304, SS304L, SS316, SS316L, Monel, Titanium, Inconnel 600, Hastelloy C, Poly Propylene, other on request (Subject to pressure & Temperature condition)
Cover Plate	In forged construction: Carbon steel, SS304, SS304L, SS316, SS316L, Monel, Titanium, Inconnel 600, Hastelloy C, Poly Propylene
Cushion	CAF, PTFE, Grafoil with SS prignated
Gasket	CAF, PTFE, Grafoil with SS prignated
Fastner	SS, ASTM A 193 Gr B7 / A194 Gr 2H / Anodized Aluminium (for PP moc)
Scale	Aluminium anticorossion powder coated and SS engraved in mm
Glass	Applicable till 320°C as per DIN 708 / 7081, BS 3463, JS B 8211, Toughened, Borosilicate glass
Process Connection	Screwed / Flanged / Socket weld and other on request
Isolation Valve	Auto ball check valve (a) Screwed bonnet offset construction suitable upto 50 kg/cm² (b) Bolted bonnet offset construction suitable above 50 kg/cm² (c) Material construction as per wetted part
Vent	1/2" Plugged / 1/2" Needle valve / 1/2" Ball valve / 1/2" Globe Valve / 1/2" Gate Valve
Drain	1/2" Plugged / 1/2" Needle valve / 1/2" Ball valve / 1/2" Globe Valve / 1/2" Gate Valve
Optional	(a) Non-frost extension for extreme low temperature application (b) Heating jacket - to read the level of high congelable or ebullient liquid (c) IBR certification

*Specification given are subject to changed without further notice.

MERCOID
Tel: 03-5569 2933 (6 Lines) Fax: 03-5569 2588, 5569 2788
Email: mercoid@mercoid.com.my, valmicro@valmicro.com.my
http://www.mercoid.com.my

LEVEL - TRANSPARENT LEVEL GAUGE

VARIMEX Valves® CO. LTD. HELS HOSE-EXPANSION JOINT-LEVEL CONTROL-STEAM TRAP AYVAZ

1 Main Chamber
2 Cover Plate
3 Transparent Glass
4 Bolt & Nuts
5 Isolation Valve
6 Process Connection
7 Vent Ball Valve
8 Drain Ball Valve

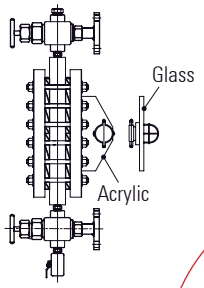

Option : Illuminator

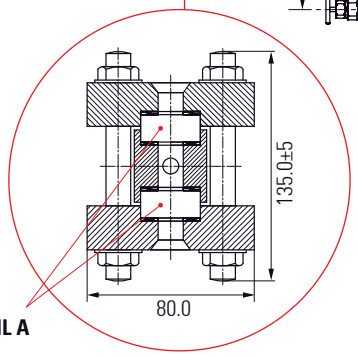

Refer to **DETAIL A**

Transparent Construction
(Sectional View)

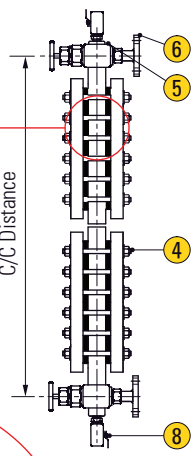

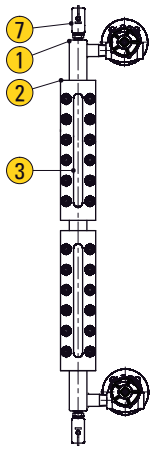

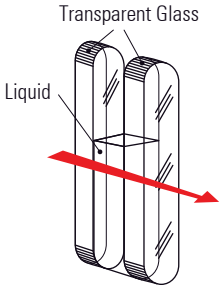

DETAIL A
(Principle of Transparent Level Glass)

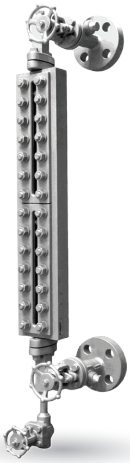

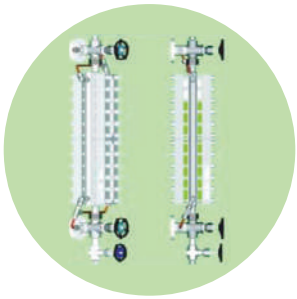

Option : Jacket Type

APPLICATION

Applicable for refinery, petrochemical, chemical, power, radioactive, fertilizer, food, pharma, metal industry applications.
(Refer to corrosion resistance table for valve materials selection).

SPECIFICATION - TECHNICAL DATA

Type of Gauge	(a) Low pressure - 30kg/cm , (b) Medium pressure - 100kg/cm² , (c) High pressure - 200kg/cm²
Mounting Orientation	Top - Bottom vertical, Side - Side right, Side - Side left, Side - Side back (Right/Left)
Temperature	Up to 400°C
CCD	Max. up to 3000mm
Liquid Chamber	In forged construction: Carbon steel, SS304, SS304L, SS316, SS316L, Monel, Titanium, Inconnel 600, Hastelloy C, Poly Propylene, Other on request (Subject topressure & Temperature Condition)
Cover Plate	In forged construction: Carbon steel, SS304, SS304L, SS316, SS316L, Monel, Titanium, Inconnel 600, Hastelloy C, Poly Propylene
Cushion	CAF, PTFE, Grafoil with SS prignated
Gasket	CAF, PTFE, Grafoil with SS prignated
Fastner	SS, ASTM A 193 Gr B7 / A194 Gr 2H / Anodized Aluminium (for PP moc)
Scale	Aluminium anticorossion powder coated and SS engraved in mm
Glass	Applicable till 320°C as per DIN 708 / 7081, BS 3463, JS B 8211, Toughened, Borosilicate glass
Process Connection	Screwed / Flanged / Socket weld and other on request
Isolation Valve	Auto ball check valve (a) Screwed bonnet offset construction suitable upto 50 kg/cm² (b) Bolted bonnet offset construction suitable above 50 kg/cm² (c) Material construction as per wetted part
Vent	1/2" Plugged / 1/2" Needle valve / 1/2" Ball valve / 1/2" Globe Valve / 1/2" Gate Valve, other on request
Drain	1/2" Plugged / 1/2" Needle valve / 1/2" Ball valve / 1/2" Globe Valve / 1/2" Gate Valve, other on request
Optional	(a) Protection shield for temperature up to 550°C - Mica shield (b) Illuminator - Weather proof IP 67 (c) Illuminator - Flame proof Gr.IIA/IIB (d) Illuminator - Flame proof Gr.IIC (e) Non-frost extension for extreme low temperature application (f) Heating jacket - to read the level of high congelable or ebullient liquid (g) IBR certification

SPECIFICATION - ILLUMINATOR

Rating	Up to 15W / 25W GLS lamp or 15W LED lamp With or without flashing 240 VAC	CCE Certificate	A / P / HQ / MH / 104 / 1817
Construction	In cast alloy LM6	Earthing	2 Nos. External & 1 No. Internal
Gas Group	IIA, IIB, IIC as per IS 2148 / 2004	Paint	Epoxy powder coated light grey shade 631 of IS:5
Deg of Protection	Ip66 as per IS : 12063 / 1987	Cable Entry	2 Nos. 3/4" ET with cable glands
		Mounting	Transparent acryclic sheet with mounting bracket

*Specification given are subject to changed without further notice.

MERCOID

Tel: 03-5569 2933 (6 Lines) Fax: 03-5569 2588, 5569 2788
Email: mercoid@mercoid.com.my, valmicro@valmicro.com.my
http://www.mercoid.com.my

With 'C' Channel

With Tie Rods

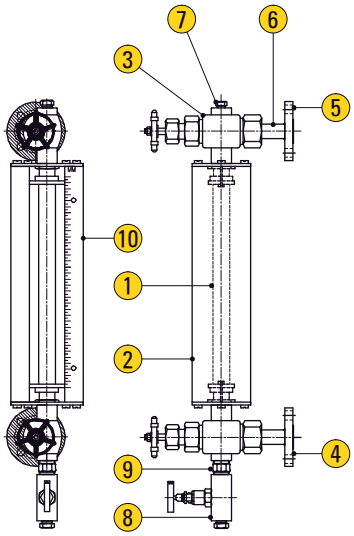

With 'C' Channel

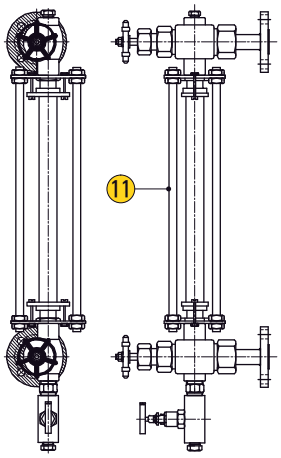

With Tie Rods

1	Glass Tube	7	Vent Plug
2	C-channel	8	Drain Valve
3	Isolation Valve	9	Nipple
4	Inlet Process Flange	10	Scale
5	Outlet Process Flange	11	Tie Rod
6	Tail Piece		

APPLICATION

Applicable for refinery, petrochemical, chemical, power, radioactive, fertilizer, food, pharma, metal industry applications.
(Refer to corrosion resistance table for valve materials selection).

SPECIFICATION - TECHNICAL DATA

Type of Gauge	Tubular level gauge - TULG
Mounting Orientation	Top - Bottom
Pressure	Up to 10 kg/cm²
Temperature	Up to 150°C
CCD	Max. up to 2000mm
MOC of Wetted Parts	CS, SS304, SS304L, SS316, SS316L, PP and other on request
Glass Tube	OD 16mm or 19mm
Glass Protection	(a) M.S. Tie rods (b) SS Tie rod (c) MS powder coated 'C' channel (d) SS 'C' channel
Process Connection	Screwed / Flanged / Socket weld and other on request
Isolation Valve	Auto ball check valve (a) Screwed bonnet offset construction (b) Material construction as per wetted part
Vent	1/2" Plugged / 1/2" Needle valve / 1/2" Ball valve / 1/2" Globe Valve / 1/2" Gate Valve
Drain	1/2" Plugged / 1/2" Needle valve / 1/2" Ball valve / 1/2" Globe Valve / 1/2" Gate Valve
Calibration Scale	Aluminium, Aluminium with powder coated, SS034, SS316, Acrylic
Special	PTFE lined on wetted part - Flanged orientation

*Specification given are subject to changed without further notice.

MERCOID
Tel: 03-5569 2933 (6 Lines) Fax: 03-5569 2588, 5569 2788
Email: mercoid@mercoid.com.my, valmicro@valmicro.com.my
http://www.mercoid.com.my

LEVEL - MAGNETIC LEVEL GAUGE

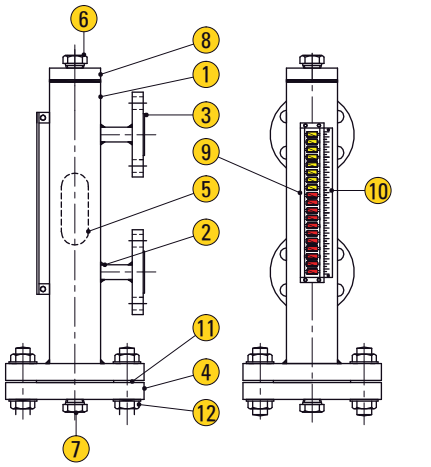

1 Liquid Chamber
2 Nozzle
3 Process Flange
4 Bottom Flange
5 Magnetic Float
6 Vent Plug
7 Drain Valve
8 Top Cap
9 Indicating System
10 Scale
11 Gasket
12 Fastener

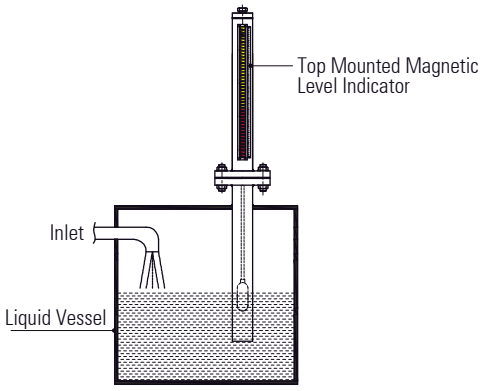

GA Drawing for Mounting and Assembly

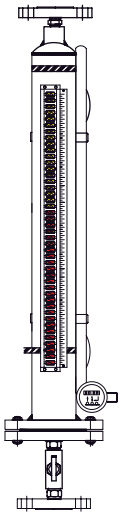

Front View

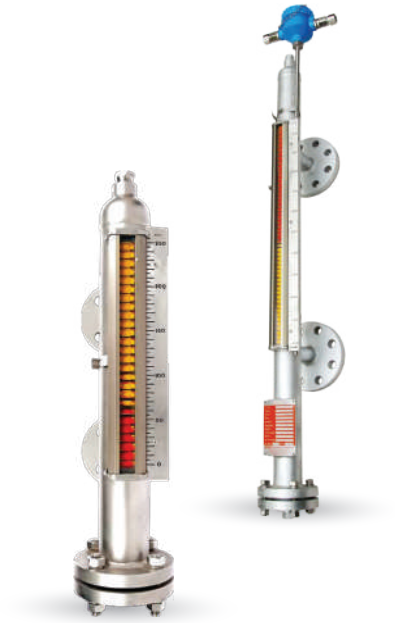

With HART transmitter mount on a 900# application gauge at CCD of 4000mm with magnetostrictive principle for chemical plant application

APPLICATION

Applicable for refinery, petrochemical, chemical, power, radioactive, fertilizer, food, pharma, metal industry applications.
(Refer to corrosion resistance table for valve materials selection).

SPECIFICATION - TECHNICAL DATA

Type of Gauge	Magnetic level gauge - MLG
Mounting Orientation	Top mounted, Side mounted
Pressure	Up to 100 kg/cm²
Temperature	Up to 300°C
CCD	Max. up to 7000mm
Liquid Chamber	In forged construction: SS304, SS304L, SS316, SS316L, PP, Titanium, Inconnel 600, Hastelloy C, other on request subject to pressure & temperature condition
MOC of Float	In forged construction: SS304, SS304L, SS316, SS316L, PP, Titanium, Inconnel 600, Hastelloy C
Gasket	CAF, PTFE, Grafoil with SS pregnanted
Fastner	CS plated, SS
Scale	Aluminium, Aluminium anticorossion powder coated and SS engraved in mm
Indicating System	Bicolour flapper in ABS, Aluminium, SS with 4mm length & 0.25mm thickness with aligned magnets
Protection Box for Bicolour Flapper & Follower Type	In mild steel, Aluminium, SS304, SS316 base on the requirements of atmospheric condition
Process Connection	Flanged
Vent	1/2" Plugged / 1/2" Needle valve / 1/2" Ball valve / 1/2" Globe Valve / 1/2" Gate Valve
Drain	1/2" Plugged / 1/2" Needle valve / 1/2" Ball valve / 1/2" Globe Valve / 1/2" Gate Valve
Special Gravity	Please specify
Limit Switch Assembly	Snap acting 1 SPDT Microswitch, 5A, 230 VAC
Switch Housing	Die cast aluminium weather proof to IP-67 Die cast aluminium explosion proof suitable for Gr. IIA, IIB Die cast aluminium explosion proof suitable for Gr. IIC
Cable Entry	1 No / 2 Nos of 3/4" ET(F)
Optional	Still well for top mounted construction

*Specification given are subject to changed without further notice.

MERCOID
Tel: 03-5569 2933 (6 Lines)
Fax: 03-5569 2588, 5569 2788
Email: mercoid@mercoid.com.my,
valmicro@valmicro.com.my
http://www.mercoid.com.my

DEVICES INSTALL ILLUSTRATION

Guided Wave Radar Level Transmitter
- 2-wire design with HART communication
- No moving parts and no re-calibration minimizes maintenance
- Not influenced by medium density, conductivity, temperature and pressure
- Handles vapor, steam, foam, buildup and turbulence well
- Suitable for interface level measurement
- Suitable for small tanks, difficult tank geometry and interfering obstacles
- Local display for easy on-site installation

FMCW Radar Level Transmitter
- Non contact measurement
- With LCD display, user friendly calibration
- Available for high pressure, high temp., high viscosity fluid, dust environment
- Intrinsic safety and exposure proof
- Measuring range 0.5m ~ 40m
- Wireless supported

Magnetic Float Level Transmitter
- Output available with loop power and 3 wire resistance
- Resolution: ± 6.35mm, ± 13.7mm
- Housing available with explosion proof and anti-corrosive
- Measuring range: max. 6m

Flexible Magnetic Float Level Transmitter
- High performance and reliable electric circuit modular design
- Explosion proof housing. It is not affected by environmental temperature and change of pressure
- Flexible type is available for local indicator and quick setup. Easy installation and need require recalibration
- Choose dual-float as two different specific gravity level detection

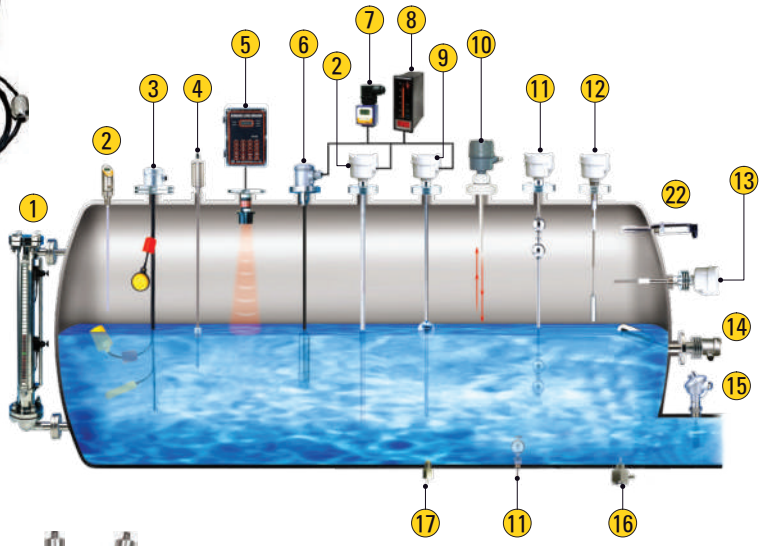

Ultrasonic Level Transmitter
- Non-contact operation ensures readings will not be affected by material character (Such as pressure, viscosity, density)
- Liquid measuring range max. 50m, Short range 5m available
- Solid measuring range max. 35m, Short range 5m available
- Level, distance, flow volume display function selectable

Wafer Magnetic Float Level Transmitter
- High precision, capable of reaching 5mm or 3mm
- Compact structure, strong environmental adaptability, anti fouling, high pressure resistance
- Casting protection rating IP67

Magnetostrictive Level Transmitter
- Absolute position measurement
- Excellent resolution and repeatability
- Voltage, current and RS485 outputs
- Field adjustable zero and span settings (analog only)
- Fast response time, high reliable performance of 0.01% F.S. resolution with 0.1% F.S. Linearity
- Enclosure IP67 rating
- Application: LPG liquid medium, Pharmaceutical / Beverage chemical process

Magnetostrictive Level Transmitter
- Absolute position output, returning to zero adjustment is not required after power restoration
- High resolution, high precision
- Dual liquid level interface measurement

*Specification given are subject to changed without further notice.

LEVEL - TRANSMITTER & SWITCH

Cable Float Level Switch
- Float material available with plastic and stainless steel
- Micro switch, reed switch and mercury switch also available
- Simple installation and durable

Side Mounting Float Switch
- Max. operating temp. 350ºC
- Wetted parts available with stainless steel and plastic
- Housing available with explosion proof and anti-corrosive
- Approvals : ABS, GL, CE

1. By-Pass Level Transmitter
2. RF-Capacitance Level Transmitter
3. Cable Float Level Switch
4. Magnetostrictive Level Transmitter
5. Ultrasonic Level Transmitter
6. Pressure Level Transmitter
7. Loop Power Indicator
8. Microprocessor Based Bargraohic Display Scaling Meter
9. Magnetic Float Level Transmitter
10. FMCW Radar Level Transmitter
11. Mini Float / Magnetic Float Level Switch
12. RF-Capacitance / Admittance Level Switch

Magnetic Float Level Switch
- Custom-made multi-point control, easy installation, reliable performance
- Housing available with explosion proof and anti-corrosive
- Max. operating temp. 200ºC for Stainless steel
- Application : Liquid processing, Heat exchanger, Hydraulic, Power plant, Oil, Shipbuilding petrochemical industries

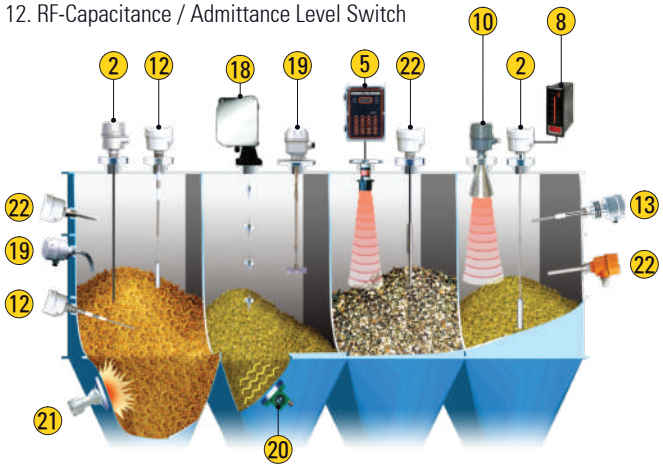

Tuning Fork Level Switch
- Power supply : 20 ~ 250VAC/VDC, 50/60Hz
- Output : SPDT relay, SSR MOSFET
- No calibration required. Ease of use, rugged design
- High / low failure safe modes. Safe and reliable operating

RF-Capacitance / Admittance Level Switch
- Suitable for sticky, viscosity application
- Max. operating temp. 550ºC
- Time delay & ground level test function available

13. Capacitance Level Switch
14. Side Mounting Float Switch
15. Paddle Flow Switch
16. Thermal Dispersion Flow Switch
17. Optical Level Switch
18. Electromechanical Level Measuring System
19. Rotary Paddle Level Switch
20. Pneumatic Vibrator
21. Air Hammer
22. Vibrating Probe & Tuning Fork Level Switch

Rotary Paddle Level Switch
- Torsion adjustable for light material
- Clutch assembly to protect the motor
- Good shaft seal designed
- Temperature up to 200ºC
- Various sealing ring design to protect dust permeation
- Application : Suitable for chemical, Food, Mining, Plastic, Ceramic industries

Capacitance Level Switch
- Ground level test function available
- Max. operating temp. 800ºC
- Sensitivity and time delay adjustable

RF-Capacitance / Admittance Level / Indicator Transmitter
- Power supply : 18 ~ 30VDC
- Output current : 4 ~ 20mA
- Accuracy : ± 1% F.S.
- Max. tensile strength of wire (9mm) can up to 3.5 tons and 50m in length
- Measuring range : 20 ~ 2000pF
- High temp. up to 200ºC
- Unaffected by pressure, sound wave temperature

LEVEL - SWITCH

MERCOID
Tel: 03-5569 2933 (6 Lines) Fax: 03-5569 2588, 5569 2788
Email: mercoid@mercoid.com.my, valmicro@valmicro.com.my
http://www.mercoid.com.my

SIKA

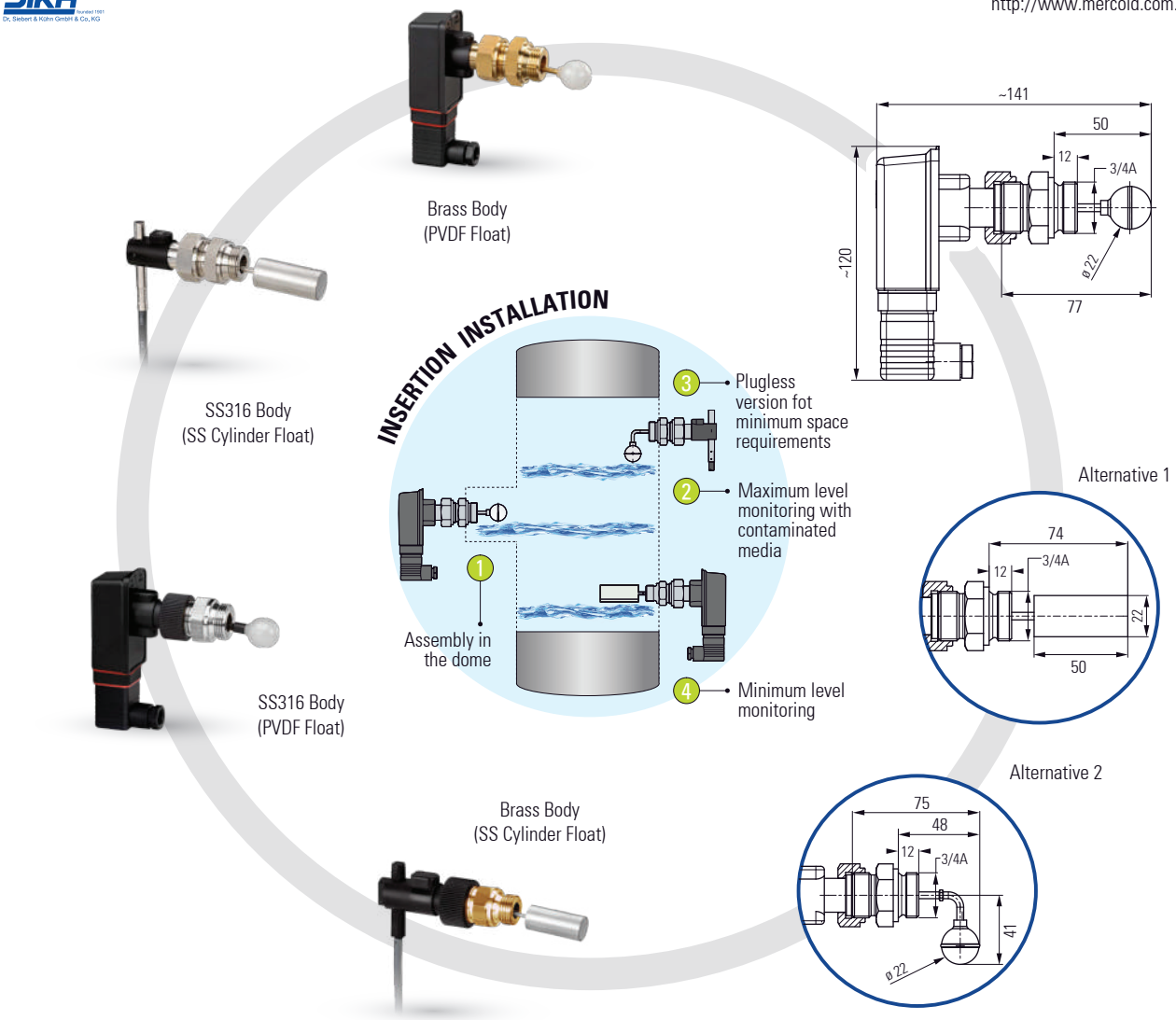

APPLICATION

Suitable for steel, chemical, shipbuilding, food, pharmaceutical, optical, hydropower, machine tool, refrigeration and air conditioning, electronics, semiconductor and other industries. Flow detection control for all types of transfer pipelines or cooling pipelines.

SPECIFICATION

Switching Function		Contact • Closes at increasing flow • Opens at decreasing flow Reversing possible
Pressure Rating		PN 25
Temperature Ranges	Medium	-25...110ºC
	Ambient	-25...80ºC
Switching Current		Max. 1 A
Switching Voltage		Max. 230 VAC, 48 VDC
Rating		Max. 26 VA, 20 W
Degree of Protection EN60529		IP65
Protection Class EN60730-1		Class II

Electrical Connection Standard 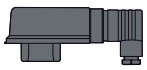	**Plug connector** **EN175301-803-A** incl. cable sockett
Optional Power 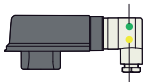 Flow	**Plug connector EN175301-803-A** incl. plug with two LED for optical flow and power indication in plug (for switching voltages 24V...230 VAC/DC) For use in potentially explosive atmospheres, max. media temperature 100ºC
Optional 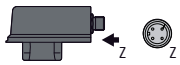	**4-pin-sensor plug** M 12x1 acc. IEC 947-5-2
Optional 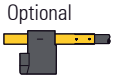	Connection cable 1.5m

MATERIAL

Parts	Material
Body	Brass, St Steel 1.4571, Plastic NORYL PPO GFN3
Float System	St Steel 1.4571, PVDF

*Specification given are subject to changed without further notice.

PRESSURE

GAUGE | ACCESSORIES | SWITCH

Pressure measurement is the analysis of an applied force by a fluid (liquid or gas) on a surface. Pressure is typically measured in units of force per unit of surface area. Many techniques have been developed for the measurement of pressure and vacuum. Instruments used to measure and display pressure in an integral unit are called pressure meters or pressure gauges or vacuum gauges.

A pressure switch is a form of switch that closes an electrical contact when a certain set fluid pressure has been reached on its input. The switch may be designed to make contact either on pressure rise or on pressure fall. Pressure switches are widely used in industry to automatically supervise and control systems that use pressurized fluids.

PRESSURE GAUGE & RECORDER
UTILITY, SEMI SS, FULLY SS

MERCOID
Tel: 03-5569 2933 (6 Lines) Fax: 03-5569 2588, 5569 2788
Email: mercoid@mercoid.com.my, valmicro@valmicro.com.my
http://www.mercoid.com.my

BADOTHERM® ALCO GERMANY DK Baumer


Utility Type


Semi Stainless Steel Type


Fully Stainless Steel Type


Pressure Recorder

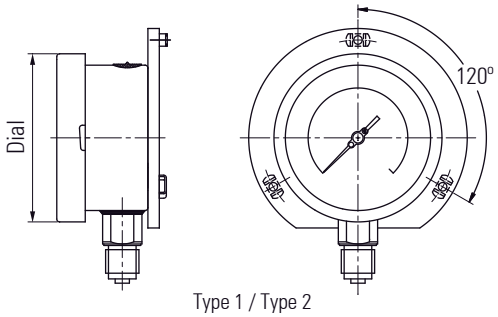

Type 1 / Type 2

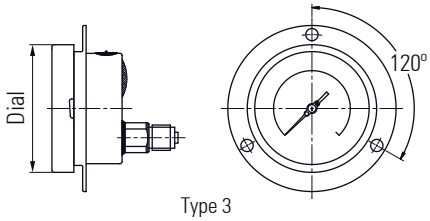

Type 3

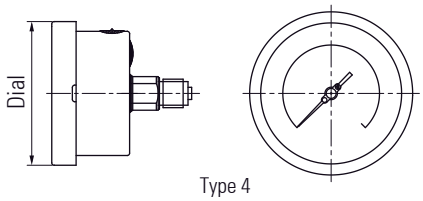

Type 4

APPLICATION

Suitable for corrosive, food & beverage, pharmaceutical, cryogenics, pumps, diesel engines & refrigerating plants, chemical & petrochemical industries, conventional & nuclear power plants, environments & gaseous or liquid media that will not obstruct the pressure system, hydro-cleaning machines, presses, engine compressors, turbines.

SPECIFICATION - TECHNICAL DATA

Dial Size (mm)	40	50	63	100	160	200	250	300
Measuring Ranges*	0 ... 1.6 Bar to 0 ... 0.25 Bar	-1 ... 0 Bar to 0 ... 1000 Bar	-1 ... 0 Bar to 0 ... 1000 Bar	-1 ... 0 Bar to 0 ... 1600 Bar	-1 ... 0 Bar to 0 ... 1600 Bar	-1 ... 0 Bar to 0 ... 1600 Bar	-1 ... 0 Bar to 0 ... 1600 Bar	-1 ... 0 Bar to 0 ... 1600 Bar
Accuracy (according to EN 837-1)	Class 1.6 to Class 1							
Wetted Parts Material	Bronze / Brass / Stainless Steel 1.4404 (316L) / Stainless Steel or Monel 400							
Measuring Element	Bourdon Tube							
Case Material	Black Painted Steel / Stainless Steel (304) / Stainless Steel (316)							
Process Connection	G 1/8 / G 1/4 / G 3/8 / G 1/2 / 1/8 NPT / 1/4 NPT / 3/8 NPT / 1/2 NPT							
Protection Rating	IP 65 - IP 67							
Approval	ATEX II2GDc-IM2c / Lloyd's Register							
Additional Information	With damping fluid / For oxygen application / Zero adjustment / With baffel wall							

* Note : Other pressure units are available on request

SPECIFICATION - TECHNICAL DATA (PRESSURE RECORDER)

Case	Cast aluminium, Corrosion resistant backed black enamel case / MS /SS
Dimension	14" x 17" x 5"
Weight	24 lbs approximately and plus element weight
Pens	Disposable recording fiber tip recording pen
Mounting	Flush or Face
Connection	Bottom standard
Chart	10" Circular
Accuracy	1% of span range
Chart Drive	Standard 8 days manual or electrical 110 or 220 V 50 cycles rotation 24 hours
Ink	Red or blue
Recording	Single pen or double pen
System	Mercury in steel for temperature recorder & Bottom system for pressure recorder
Threads	1/2" or 3/4" or 1" or other threads
Capillary	PVC / Copper / Other metal on request
Parts	All parts in list made as per international standard in stainless steel, brass and spring steel

*Specification given are subject to changed without further notice.

MERCOID
Tel: 03-5569 2933 (6 Lines) Fax: 03-5569 2588, 5569 2788
Email: mercoid@mercoid.com.my, valmicro@valmicro.com.my
http://www.mercoid.com.my

PRESSURE GAUGE
SAFETY / CONTACT / DIFFERENTIAL / DIAPHRAGM / CAPSULE / ABSOLUTE

Safety

Solid Front Type | Phenolic Type

With Contact

Differential

Diaphragm

Capsule

Absolute

SPECIFICATION - TECHNICAL DATA

Gauge Type	Safety	With Contact	Differential	Diaphragm	Capsule	Absolute
General Data	• For corrosive gases and liquids • With or without damping fluid • With or without dashpot • Solid front	• Local indication of pressure • 1 or 2 setpoints for regulation or alarm setting • Output signal: 4 ... 20mA	• Very low differential pressure range • Static pressure up to 250 mBar • Safety valve on high pressure side • For corrosive process fluids and atmospheres • Low differential pressure • Static pressure up to 400 Bar	• Welded with blow-out disc, back • For gaseous and liquid, aggressive, high and low viscosity media • High overpressure safety	• Low pressure measurements • High overpressure protection • Suitable for corrosive gases	• Absolute pressure measurements for corrosive process fluids and atmospheres
Industries	Oil & gas / Chemical water / Waste water energy	Food & beverage, Laboratory & medical, Oil & gas / Chemical water / Waste water energy, Transport & logistics, Machinery	Laboratory & medical, Oil & gas / Chemical water / Waste water energy	Laboratory & medical, Oil & gas / Chemical water / Waste water energy	Laboratory & medical, Oil & gas / Chemical machinery	Laboratory & medical, Oil & gas / Chemical water / Waste water energy
Nominal Size (mm)	100 / 160	100 / 160	100 / 150	63 / 100 / 160	63 / 100 / 160	63 / 100 / 150
Measuring Ranges	-1 ... 0 Bar to 0 ... 1600 Bar	0 ... 600 mBar -1 ... 0 Bar to 0 ... 1600 Bar	0 ... 10 mBar to 0 ... 250 mBar 0 ... 0.1 Bar to 0 ... 25 Bar	0 ... 60 mBar to 0 ... 1600 Bar	0 ... 10 mBar to 0 ... 600 mBar	0 ... 0.1 Bar to 0 ... 16 Bar abs
Static Pressure	-	-	Max. 400 Bar	-	-	-
Accuracy	Class 1 (Acc. to EN 837-1) Grade 2 (Acc. to ASME B40.100)	Class 1 (Acc. to EN 837-1) Class 1.6 (Acc. to EN 837-3) for output signal: ±0.5%	± 1% (Dry version) ± 1.6% (With damping fluid)	Class 1 (Acc. to EN 837-1)	Class 1.6 (Acc. to EN 837-3)	± 2%
Overpressure	-	-	-	-	-	Max. 25 Bar
Wetted Parts Material	• SS 1.4404 (316L) • Monel 400	• SS 1.4404 (316L)	• SS 316L • Monel • Hestelloy C276	• SS 1.4435 (316L)	• Bronze / Brass • SS / FKM	• SS 1.4404 (316L) • Bronze / Brass
Measuring Element	• Bourdon tube	• Bourdon tube • Diaphragm* • Piezoresisitve sensor	• Bourdon tube • Bellow • Differential cell	• Diaphragm*	• Capsule	• Bellow
Contact Type	-	Mechanical sliding contact, magnetic spring contact or inductive contact	Mechanical sliding contact	-	-	Mechanical sliding contact
Case Material	• SS 304 • SS 316 • Polypropylene / Phenolic	• SS 304 • SS 316	• SS 304 • SS 316	• SS 304 • SS 316	• SS 304 • SS 316	• SS 304 • SS 316
Process Connection	G 1/4 / G 1/2 / 1/4 NPT / 1/2 NPT	G 1/4 / G 1/2 / 1/4 NPT / 1/2 NPT / Flanges DIN & ANSI**	2 x G 1/2 / 2 x 1/2 NPT	G 1/2 / 1/2 NPT / Flanges DIN & ANSI / Clamp / Varient	G 1/4 / G 1/2 / 1/4 NPT / 1/2 NPT	G 1/4 / G 1/2 / 1/4 NPT / 1/2 NPT
Protection Rating	IP 67	IP 65	IP 65 / 66	IP 65	IP 33 / IP 44 / IP 65	IP 65
Approval	• ATEX II2GDc-IM2c • Lloyd's Register	• ATEX II2G Ex ia T4	• ATEX II2GDc-IM2c	• ATEX II2GDc-IM2c	• ATEX II2GDc-IM2c	• ATEX II2GDc-IM2c
Additional Information	Option: • For oxygen application • With damping fluid • With dashpot	Option: • PTFE coating • With damping fluid	Option: • With damping fluid • With baffle fluid	Option: • PTFE coating • With damping fluid	• Zero adjustment, integrated, overpressure protection valve for short time overload of 20 x span Option: • With baffle wall	Option: • With damping fluid • Zero adjustment

* Refer to Diaphragm seal, ** For Diaphragm seal

*Specification given are subject to changed without further notice.

PRESSURE GAUGE
DIAPHRAGM SEAL

MERCOID
Tel: 03-5569 2933 (6 Lines) Fax: 03-5569 2588, 5569 2788
Email: mercoid@mercoid.com.my, valmicro@valmicro.com.my
http://www.mercoid.com.my

BADOTHERM® ALCO -GERMANY- DK Baumer

PP / PVDF Type

Low to High Pressure Type

Flanged Type

Robust & Compact Type

Flush Mounted Type

SPECIFICATION - TECHNICAL DATA

Diaphragm Seal Type	PP / PVDF	Robust & Compact	Flush Mounted	Low to High Pressure
General Data	• Suitable for very agressive media • No metallic part in contact with media	• Applicable for corrosive media	• Cleaning ring optional • Coating optional	• For low pressure to very high pressure • Cleaning ring optional • Suitable for corrosive media • High temperature range
Industries	Oil & gas / Chemical water / Waste water energy, Transport & logistics, Machinery	Oil & gas / Chemical water / Waste water energy, Transport & logistics, Machinery	Oil & gas / Chemical water / Waste water energy, Transport & logistics	Oil & gas / Chemical water / Waste water energy, Machinery
Process Connection	G 1/2	G 1/4 / G 1/2 / 1/4 NPT / 1/2 NPT	G 1/2 / G 3/4 / G 1 / G 1-1/2 / G 2 / 1/2 NPT / 3/4 NPT / 1 NPT / 1-1/2 NPT / 2 NPT / EN 1759-1 / EN 1092-1 / ASME B16.5	G 1/4 / G 1/2 / 1/4 NPT / 1/2 NPT
Normal Size	-	-	-	-
Body Material	PP / PVDF	Stainless steel	-	Stainless steel, Uranus B6, Hastelloy B, Hastelloy C, Tantalum, Monel, PVC, PVDF, PPH, PTFE
Flange Material	-	-	Stainless Steel	-
Diaphragm Material	EPDM / PTFE lining	Stainless steel	Stainless steel, Uranus B6, Hastelloy B, Hastelloy C, Tantalum	Stainless steel, Uranus B6, Hastelloy B, Hastelloy C, Tantalum, Monel
Measuring Ranges	0 ... 2.5 Bar to 0 ... 10 Bar	0 ... 1 Bar to 0 ... 250 Bar	0 ... 25 mBar to 0 ... 400 Bar	0 ... 160 Bar to 0 ... 1000 Bar 0 ... 160 mBar
Nominal Size	-	-	DN 50 ... 100 2" ... 4"	
Pressure Rating	-	-	PN 10 ... 100 Class 150 ... 2500	-
Approval	-	-	NACE MR0103, MR0175	-
Additional Information	-	-	-	-

*Specification given are subject to changed without further notice.

MERCOID
Tel: 03-5569 2933 (6 Lines) Fax: 03-5569 2588, 5569 2788
Email: mercoid@mercoid.com.my, valmicro@valmicro.com.my
http://www.mercoid.com.my

PRESSURE GAUGE
DIAPHRAGM SEAL

Process Transmitter Type

Hygienic Type

Tongue Type

SPECIFICATION - TECHNICAL DATA

Diaphragm Seal Type	Flanged	Process Transmitter	Tongue	Hygienic
General Data	• Many process connection standards available • Cleaning ring optional • Coating optional	• Pressure, level and flow measurement • Max. 400ºC • Low static pressure to high static pressure	• Longitudinal starshaped seal • Applicable for corrosive media • Compact diaphragm seal	• Clamp connection • SMS 1145 (with union nut) • SMS 1145 (threaded socket) • Varivent • Clamp with extended membrane for flush mounting in tanks or pipes • Clamp with extended membrane for flush mounting • DIN 11851 (with union nut) • DIN 11851 (threaded socket) • In line seals for hygienic applications • DIN 32676, ISO 2852, SMS 1146, DIN 11851
Industries	Oil & gas / Chemical water / Waste water energy, Transport & logistics	Oil & gas / Chemical energy	Oil & gas / Chemical water / Waste water energy, Machinery	Food & beverage, Laboratory & medical, Water / Waste water, Machinery
Process Connection	EN 1759-1 / EN 1092-1 / ASME B16.5	EN 1759-1 / ASME B16.5	G 3/4 DIN 3852 / G 1/2 DIN 3852 / Union nut G 3/4 or G1	-
Normal Size	-	-	-	DN 25, 38, 51, 1", 1-1/2", 2"
Body Material	Stainless steel, Uranus B6, Hastelloy B, Hastelloy C, Monel, PVC, PVDF, PPH, PTFE	-	Stainless steel	Stainless steel 1.4435 (316L)
Body Material	-	Stainless Steel	-	-
Diaphragm Material	Stainless steel, Uranus B6, Hastelloy B, Hastelloy C, Tantalum Monel	Stainless steel, Hastelloy C	Stainless steel	Stainless steel 1.4435 (316L), Hastelloy C
Measuring Ranges	0 ... 160 mBar to 0 ... 420 Bar	0 ... 10 mBar to 0 ... 420 Bar	0 ... 2.5 Bar to 0 ... 1000 Bar	0 ... 1 Bar to 0 ... 40 Bar
Nominal Size	DN 10 ... 65 3/8" ... 2-1/2"	DN 15 ... 50 1/2" ... 2"	-	-
Pressure Rating	PN 10 ... 420 Class 150 ... 2500	Class 150 ... 2500	-	-
Approval	-	NACE MR0103, MR0175	-	3-A
Additional Information	-	-	-	• Ra < 0.8µm • Option electropolished Ra < 0.4µm

*Specification given are subject to changed without further notice.

PRESSURE GAUGE
ACCESSORIES

MERCOID
Tel: 03-5569 2933 (6 Lines) Fax: 03-5569 2588, 5569 2788
Email: mercoid@mercoid.com.my, valmicro@valmicro.com.my
http://www.mercoid.com.my

BADOTHERM® ALCO -GERMANY- DK Baumer

Cooling Tower Type

Siphon Type

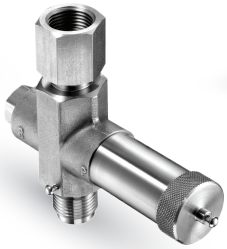

Pulsation Dampener Type

Pressure Limiter Type

Shut Off Valves Type

Capillary Type

SPECIFICATION - TECHNICAL DATA

Accessories	Shut Off Valves	Pressure Limiter Overload Protector (Gauge Saver)	Pulsation Dampener	Siphon	Capillary
General Data	• Separation of gauge or transmitter from the process	• Protection of pressure gauges and transmitters from overpressure	• Protection of pressure gauges and transmitters from overpressure	• Protects gauge from high fluid temperatures • Recommended for steam	• Reduces medium temperature • Separates the instrument from heat sources • Reduces pulsations
Industries	Oil & gas / Chemical water / Waste water energy, Transport & logistics, Machinery	Oil & gas / Chemical water / Waste water energy, Transport & logistics, Machinery	Oil & gas / Chemical water / Waste water energy, Transport & logistics, Machinery	Oil & gas / Chemical water / Waste water energy	Oil & gas / Chemical water / Waste water energy
Process Temperature	-20 ... +250°C	Max. +150°C	Max. +250°C	Max. +400°C	Max. +400°C (Depending on process pressure)
Max. Pressure	400 Bar	700 Bar	Max. 600 Bar	Max. +400 Bar	Max. +400 Bar (Depending on process temperature)
Materials	Brass, Steel, Stainless steel, PTFE	Stainless steel, Viton	Brass, Steel, Stainless steel	Steel, Stainless steel	Stainless steel
Set Points	-	-1 ... 400 Bar	-	-	-

*Specification given are subject to changed without further notice.

MERCOID
Tel: 03-5569 2933 (6 Lines) Fax: 03-5569 2588, 5569 2788
Email: mercoid@mercoid.com.my, valmicro@valmicro.com.my
http://www.mercoid.com.my

PRESSURE GAUGE
ACCESSORIES


Flushing Ring Type


Instrument Valves


Two Valve Manifolds


Pulsation Dampener Type
(Snubber)

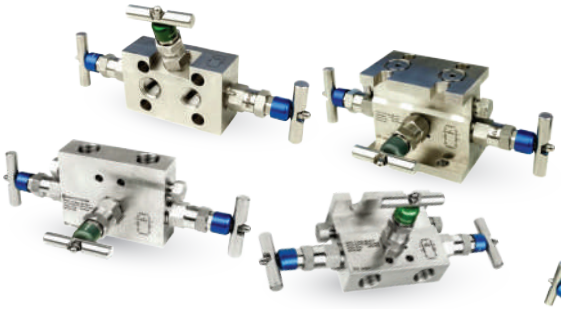
Three Valve Manifolds

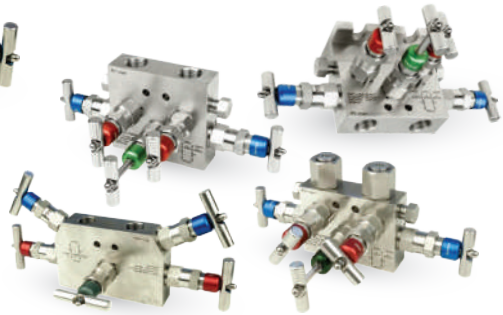
Five Valve Manifolds


Monoflange DBB


Instrument DBB

SPECIFICATION - TECHNICAL DATA

Accessories	Cooling Tower	Instrument Valve	Flushing Ring	2/3/5 Way Manifold	Double Block & Bleed Valve
General Data	• Protect pressure Instruments, gauges, switches and transmitters directly coming in contact with high temperature process fluids or vapours filled with condensation fluids. • Reduce process pulsation, act as heat dispenser and generate cooling effect to save instrument from working at dangerous temperature.	• Wide variety of instrument valves like 2 way, 3 way, multiport, single block bleed.	• Designed to be sandwiched between the process flange & the diaphragm seal. • Material collected in front of diaphragm can be flushed out through the flushing ports.	• Manifold • 2, 3 or 5 ways	• Instruments • Monoflange
Industries	Oil & gas / Chemical water / Waste water energy	Oil & gas / Chemical water / Waste water energy	Oil & gas / Chemical water / Waste water energy	Oil & gas / Chemical water / Waste water energy	Oil & gas / Chemical water / Waste water energy
Process Temperature	Max. +400ºC (Depending on process pressure)	Max. +400ºC (Depending on process pressure)	Max. +400ºC (Depending on process pressure)	Max. +200ºC	Max. +400ºC (Depending on process pressure)
Max. Pressure	Max. +400 Bar (Depending on process temperature)	Max. +400 Bar (Depending on process temperature)	Max. +400 Bar (Depending on process temperature)	420 Bar	Max. +400 Bar (Depending on process temperature)
Materials	Stainless steel	Stainless steel	Carbon steel, Titanium, Hastelloy C, Monel, AISI 316 SS (standard)	Stainless steel, PTFE	Carbon steel, Titanium, Hastelloy C, Monel, AISI 316 SS (standard)
Set Points	-	-	-	-	-

*Specification given are subject to changed without further notice.

PRESSURE SWITCH

MERCOID
Tel: 03-5569 2933 (6 Lines) Fax: 03-5569 2588, 5569 2788
Email: mercoid@mercoid.com.my, valmicro@valmicro.com.my
http://www.mercoid.com.my

General Duty Pressure Switch

Single Control Dual Control

Heavy Duty Pressure Switch

Differential Pressure Switch

Process & Industrial Application

Flame & Explosion Proof Application

APPLICATION

Suitable for air compressors, water pumps, booster pumps, fire-fighting equipment, oil supply equipment, high-pressure cleaning apparatus

FEATURES

General Duty Pressure Switch

- Adjustable pressure range
- Narrow adjustable differential depending on model
- Range & differential pointer in units Bar & Psig
- Range & differential individually lockable by wire seal
- High rated SPDT contacts for all versions
- Shatter resistant contacts
- Heavy duty, finger-proof terminal blocks
- Captive terminal and cover screws
- Dual pressostats with two independent SPTD switches
- Manual toggle for system checkout & override
- Standard pressure connection : 7/16" -20 UNF for 1/4" SAE male flare connection
- Low pressure and high pressure versions available with TÜV approval acc. to EN 12263 to meet requirements of DIN 8901 and EN 378
- Automatic and manual reset versions
- Some versions with convertible auto/manual reset
- Locking plate and mounting screws included

Heavy Duty Pressure Switch

- Large space for cable mounting
- Easy to adjust
- Separate screw for upper and lower switching-point setting
- Accurate scale
- Transparent, UV-resistant cover
- Protection class : IP 65
- Worldwide approvals
- High repeatability of set switch-points

Differential Pressure Switch

- Immediate reset (no cooling down period)
- Precise timing
- Adjustable time delay from 20 to 150 sec (ZU types)
- Saperate output signals for operation and alarm
- Suitable for supply voltage 24 to 240 VAC / DC
- Pressure connection : Flare 7/16" -20 UNF, 1/4" SAE male

SPECIFICATION - GENERAL DUTY PRESSURE SWITCH

Type	Upper Switch Point Adjustable from ... to (Bar)	Differential Pressure Adjustable from ... to (Bar)	Minimum Lower Switch Point (Bar)	Maximum Pressure (Bar)
PS1 - A2R	-0.8 ... 1.5	0.2 ... 1	-1	12
PS1 - A1R	-0.75 ... 3	0.25 ... 2	-0.9	16
PS1 - A3R	-0.5 ... 7	0.5 ... 5	-0.9	25
PS1 - A8R	-0.5 ... 8	0.5 ... 5	-0.9	12
PS1 - A6R	4 ... 12	0.5 ... 7	0.1	16
PS1 - A4R	1 ... 20	1 ... 10	0.3	23
PS1 - A5R	6 ... 31	2 ... 15	3	36
PS1 - A3C*	-0.5 ... 7	0.5 ... 5	-0.9	25
PS1 - A5C*	6 ... 31	2 ... 15	3	36

Note : * Material : Stainless steel bellows

SPECIFICATION - HEAVY DUTY PRESSURE SWITCH

Type	Upper Switch Point Adjustable from ... to (Bar)	Lower Switch Point Adjustable from ... to (Bar)	Smallest Differential at Lower ...	Smallest Differential at Higher End of Range	Max. Operating Pressure (Bar)
FF 4-2 DAH	0.11 ... 2	0.04 ... 1.89	0.07	0.11	20
FF 4-4 DAH	0.22 ... 4	0.07 ... 3.75	0.15	0.25	24
FF 4-8 DAH	0.5 ... 8	0.2 ... 7.5	0.3	0.5	30
FF 4-16 DAH	1 ... 16	0.4 ... 15	0.6	1	36
FF 4-32 DAH	2 ... 32	0.8 ... 30	1.2	2	52
FF 4-60 PAH	8 ... 60	4 ... 52	4	8	100
FF 4-120 PAH	16 ... 120	8 ... 104	8	16	200
FF 4-250 PAH	30 ... 250	14 ... 226	12	24	400

SPECIFICATION - DIFFERENTIAL PRESSURE SWITCH

Differential Pressure Controls Type	Time Delay		Cut Out		Max. Differential Pressure (Bar)	Max. Proof Pressure (Bar)
	Adjustable (Sec.)	Factory Setting (Sec.)	Adjusting Range Δp (Bar)	Factory Setting (Bar)		
FD 113	-	-	0.3 ... 4.5	0.7	-0.8 ... 12	25
FD 113 ZU	20 ... 150	120				
FD 113 ZU (A22-057) Copeland™ Brand Products	-	115 fix	-	0.63 fix		

*Specification given are subject to changed without further notice.

TEMPERATURE

GAUGE | ACCESSORIES | SWITCH

A temperature gauge is a device used to indicate the temperature of an item being monitored. Common methods of measuring temperature include bimetallic strip (the bending of which increases with temperature) and the thermocouple which produces an electronic voltage that depends on the temperature.

Temperature switch are generally used in industry for limiting temperature. They monitor the temperature of machinery and equipment and, for example, switch off machinery if it overheats or switch on a fan to cool the equipment.

TEMPERATURE GAUGE & RECORDER
(BI-METAL)

MERCOID
Tel: 03-5569 2933 (6 Lines) Fax: 03-5569 2588, 5569 2788
Email: mercoid@mercoid.com.my, valmicro@valmicro.com.my
http://www.mercoid.com.my

BADOTHERM® ALCO GERMANY DK Baumer

Every Angle Type

Bottom Entry Type

Back Entry Type

Temperature Recorder

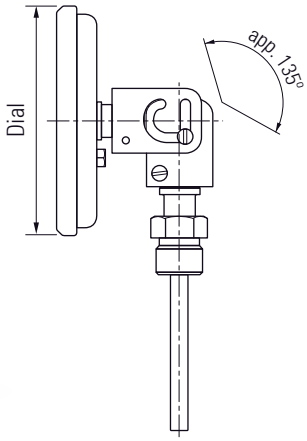

Every Angle Type

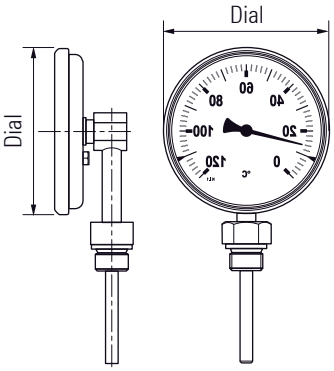

Bottom Entry Type

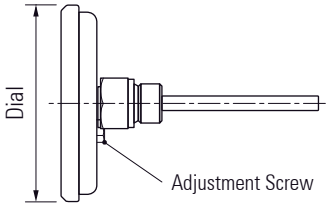

Back Entry Type

APPLICATION

Suitable for corrosive, food & beverage, pharmaceutical, cryogenics, pumps, diesel engines & refrigerating plants, chemical & petrochemical industries, conventional & nuclear power plants, environments & gaseous or liquid media that will not obstruct the pressure system, hydro-cleaning machines, presses, engine compressors, turbines.

SPECIFICATION - TECHNICAL DATA

Dial Size (mm)	50	63	80	100	160	200
Stem Length (mm)	50 to 1200					
Measuring Ranges*	-30 ... 50°C to 0 ... 650°C					
Accuracy (according to EN 13190)	Class 1					
Wetted Parts Material	Stainless steel (304) / Stainless steel (316) / Stainless steel (316L)					
Measuring Element	Bi-metal strip coiled					
Case Material	Stainless Steel (304) / Stainless steel (316)					
Process Connection	G 1/4 / G 3/8 / G 1/2 / 1/8 NPT / 1/4 NPT / 3/8 NPT / 1/2 NPT					
Protection Rating	IP 65 - IP 67					
Approval	ATEX II2GDc					
Additional Information	With damping fluid / Zero adjustment					

* Note : Other temperature units are available on request

SPECIFICATION - TECHNICAL DATA (TEMPERATURE RECORDER)

Case	Cast aluminium, Corrosion resistant backed black enamel case / MS /SS
Dimension	14" x 17" x 5"
Weight	24 lbs approximately and plus element weight
Pens	Disposable recording fiber tip recording pen
Mounting	Flush or Face
Connection	Bottom standard
Chart	10" Circular
Accuracy	1% of span range
Chart Drive	Standard 8 days manual or electrical 110 or 220 V 50 cycles rotation 24 hours
Ink	Red or blue
Recording	Single pen or double pen
System	Mercury in steel for temperature recorder & Bottom system for pressure recorder
Threads	1/2" or 3/4" or 1" or other threads
Capillary	PVC / Copper / Other metal on request
Parts	All parts in list made as per international standard in stainless steel, brass and spring steel

*Specification given are subject to changed without further notice.

MERCOID
Tel: 03-5569 2933 (6 Lines) Fax: 03-5569 2588, 5569 2788
Email: mercoid@mercoid.com.my, valmicro@valmicro.com.my
http://www.mercoid.com.my

TEMPERATURE GAUGE
(GAS FILLED)

BADOTHERM® ALCO -GERMANY- D.K Baumer

Temperature Gauge Type 1

Temperature Gauge Type 2

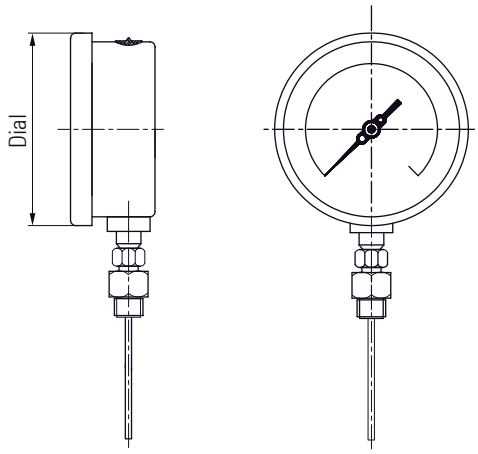

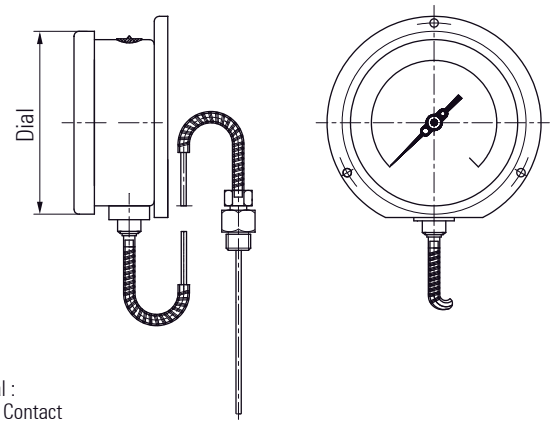

Optional :
With Electric Contact

APPLICATION

Suitable for corrosive, food & beverage, pharmaceutical, cryogenics, pumps, diesel engines & refrigerating plants, chemical & petrochemical industries, conventional & nuclear power plants, environments & gaseous or liquid media that will not obstruct the pressure system, hydro-cleaning machines, presses, engine compressors, turbines.

SPECIFICATION - TECHNICAL DATA

Dial Size (mm)	100	125	150	200	250	200
Stem Length (mm)	50 to 600					
Capillary Length (m)	1 /3 / 7 / 10 / 15 / Other length are available on request					
Measuring Ranges*	-40 ... 60ºC to 0 ... 650ºC					
Accuracy (according to EN 13190)	Class 1					
Wetted Parts Material	Stainless steel (304) / Stainless steel (316) / Stainless steel (316L)					
Measuring Element	Inert gas filled expansion system					
Case Material	Stainless Steel (304) / Stainless steel (316)					
Process Connection	G 1/4 / G 3/8 / G 1/2 / 1/8 NPT / 1/4 NPT / 3/8 NPT / 1/2 NPT					
Protection Rating	IP 65 - IP 67					
Approval	ATEX II2GDc					
Additional Information	With damping fluid / Zero adjustment / Electrical contacts					

* Note : Other temperature units are available on request

*Specification given are subject to changed without further notice.

TEMPERATURE GAUGE
(VARIOUS APPLICATION)

MERCOID
Tel: 03-5569 2933 (6 Lines) Fax: 03-5569 2588, 5569 2788
Email: mercoid@mercoid.com.my, valmicro@valmicro.com.my
http://www.mercoid.com.my

BADOTHERM® ALCO -GERMANY- DK Baumer

Bi-metal
HVAC Application Type

Bi-metal
All Stainless Steel Type

Bi-metal
Industrial Application Type

Bi-metal
Heavy Duty Type

Bi-metal
Clamp-on Type

Bi-metal
Airducts in Ventilation
System Type

SPECIFICATION - TECHNICAL DATA

Temperature Gauge Type	Bi-metal				
General Data	• HVAC applications • Conical immersion tube for good heat transfer • Zero adjustment • All stainless steel thermometer • For corrosive applications	• Heavy industry version • Oil filling available as option	• Clamp-on thermometer • For insulated pipes up to Ø 2" • Insulating material thickness 30 ... 110mm	• Industrial applications • Small size • All stainless steel design	• For airducts in ventilation systems • Rear flange for wall mounting • Zero adjustment
Industries	HVAC, Oil & gas / Chemical water / Waste water energy	Oil & gas / Chemical water / Waste water energy	HVAC	Laboratory & medical, Energy, Machinery	HVAC
Nominal Size	80 / 100 / 130 160	100 / 130	80 / 100	40 / 63	100
Measuring Ranges	-70 ... +600ºC	-70 ... +600ºC	-20 ... +160ºC	-30 ... +500ºC	-30 ... +80ºC
Accuracy (according to EN 13190)	Class 1	Class 1	Class 1	Class 1 (≤ 250ºC) Class 2 (> 250ºC)	Class 1
Immersion Tube Material	Cu-alloy St. steel 1.4571 (316Ti)	St. steel 1.4571 (316Ti)	St. steel 1.4571 (316Ti)	St. steel 1.4571 (316Ti)	Cu-alloy
Immersion Tube Outlet	Bottom, Center back, Center back every angle	Center back every angle	Center back	Center back	Center back
Immersion Tube Diameter (mm)	Conical 6, 8	6, 8	-	4	8
Immersion Tube Length (mm)	60 ... 1000	60 ... 1000	-	60 ... 400	165
Capillary	-	-	-	-	-
Contacts	-	-	-	-	-
Case Material	St. steel 1.4301 (304)	St. steel 1.4301 (304)	St. steel 1.4301 (304)	St. steel 1.4301 (304)	St. steel 1.4301 (304)
Sensing Element	Bi-metal	Bi-metal	Bi-metal	Bi-metal	Bi-metal
Protection Rating	IP 67	IP 68	IP 50	IP 52	IP 50
Approval	ATEX Ex II 2 GDc	ATEX Ex II 2 GDc	-	-	-

*Specification given are subject to changed without further notice.

MERCOID
Tel: 03-5569 2933 (6 Lines) Fax: 03-5569 2588, 5569 2788
Email: mercoid@mercoid.com.my, valmicro@valmicro.com.my
http://www.mercoid.com.my

TEMPERATURE GAUGE
(VARIOUS APPLICATION)

SPECIFICATION - TECHNICAL DATA

Temperature Gauge Type	Gas Filled Plunger / Capillary			
General Data	• Direct measurement industrial thermometer • Liquid filling as option • Zero adjustment	• Remote measurement industrial thermometer • Liquid filling as option • Zero adjustment	• Direct reading industrial thermometer • With contacts • Liquid filling as option	• Remote measurement industrial thermometer • With contacts • Liquid filling as option
Industries	Oil & gas / Chemical water / Waste water energy, Machinery	Oil & gas / Chemical water / Waste water energy, Machinery	Oil & gas / Chemical water / Waste water energy, Machinery	Oil & gas / Chemical water / Waste water energy, Machinery
Nominal Size	63 / 80 / 100 / 160 / 250	63 / 80 / 100 / 160 / 250	100 / 160	100 / 160
Measuring Ranges	-200 ... +800ºC	-200 ... +800ºC	-200 ... +800ºC	-200 ... +800ºC
Accuracy (according to EN 13190)	Class 1	Class 1	Class 1	Class 1
Immersion Tube Material	St. steel 1.4541 (321)	St. steel 1.4541 (321)	St. steel 1.4541 (321)	St. steel 1.4541 (321)
Immersion Tube Outlet	-	-	-	-
Immersion Tube Diameter (mm)	6, 8, 11, 14	6, 8, 11, 14	6, 8, 11, 14	6, 8, 11, 14
Immersion Tube Length (mm)	100 ... 1000	100 ... 1000	100 ... 1000	100 ... 1000
Capillary	-	0.5 to 30m	-	0.5 to 30m
Contacts	-		1 or 2 set points Sliding, Magnetic spring or inductive contacts	1 or 2 set points Sliding, Magnetic spring or inductive contacts
Case & Sleeve Material	St. steel 1.4301 (AISI 304)	St. steel 1.4301 (AISI 304)	St. steel 1.4301 (AISI 304)	St. steel 1.4301 (AISI 304)
Sensing Element	Gas filled plunger	Gas filled plunger and capillary	Gas filled plunger	Gas filled plunger and capillary
Protection Rating	IP 65	IP 65	IP 65	IP 65
Approval	ATEX Ex II 2 GDc	ATEX Ex II 2 GDc	ATEX Ex ia IIC T4 Gb Ex ia IIIC T135ºC ... T85ºC Db	ATEX Ex ia IIC T4 Gb Ex ia IIIC T135ºC ... T85ºC Db

*Specification given are subject to changed without further notice.

TEMPERATURE GAUGE
(INDUSTRIAL V-LINE)

MERCOID
Tel: 03-5569 2933 (6 Lines) Fax: 03-5569 2588, 5569 2788
Email: mercoid@mercoid.com.my, valmicro@valmicro.com.my
http://www.mercoid.com.my

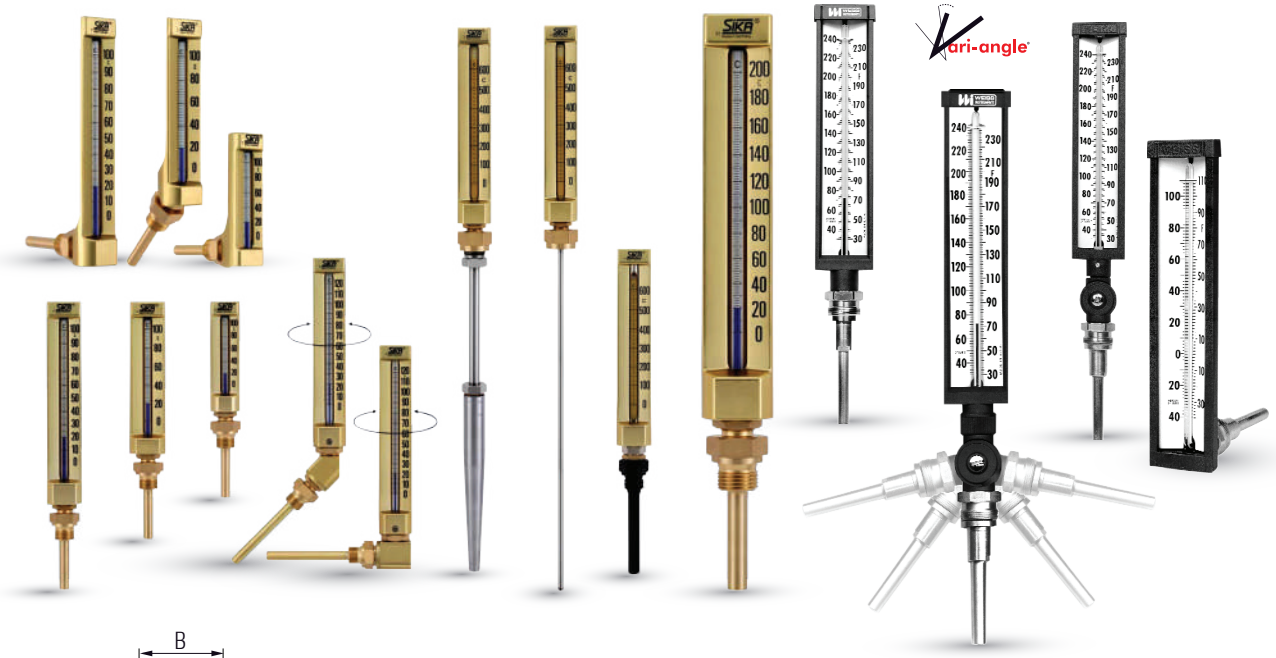

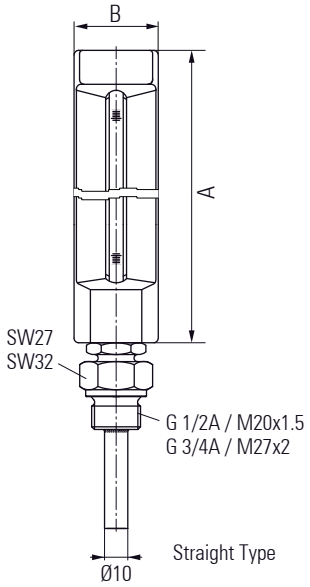

Straight Type

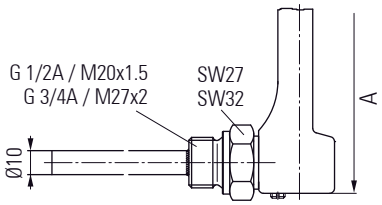

Angle 90° Type

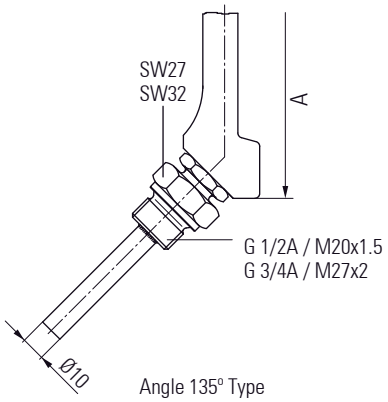

Angle 135° Type

APPLICATION

Suitable for corrosive, food & beverage, pharmaceutical, cryogenics, pumps, diesel engines & refrigerating plants, chemical & petrochemical industries, conventional & nuclear power plants, environments & gaseous or liquid media that will not obstruct the pressure system, hydro-cleaning machines, presses, engine compressors, turbines.

SPECIFICATION - TECHNICAL DATA

Casing - A x B (mm)	200 x 36	150 x 36	110 x 30	225 x 60
Measuring Ranges	-60 +40°C / -30 +50°C / 0 +60°C / 0 +100°C / 0 +120°C / 0 +160°C / 0 +200°C / 0 +250°C / 0 +300°C / 0 +400°C / 0 +500°C / 0 +600°C			
Scale*	Celsius (°C) / Celsius + Fahrenheit (°C + °F)			
Column (Filling)	Alcohol (up to 250°C) Mercury (+250°C)			
Immersion Tube Length (mm)	40 / 63 / 100 / 160 / 250 / 400			
Connection Thread	G 1/2 / G 3/4 / M20 / M27			
Immersion Tube Material	Brass / Stainless steel (304) / Stainless steel (316)			

* Note : Other temperature units are available on request

*Specification given are subject to changed without further notice.

MERCOID
Tel: 03-5569 2933 (6 Lines) Fax: 03-5569 2588, 5569 2788
Email: mercoid@mercoid.com.my, valmicro@valmicro.com.my
http://www.mercoid.com.my

TEMPERATURE GAUGE
(ACCESSORIES)

SPECIFICATION - TECHNICAL DATA

Accessories	Threaded Process	Welded Process	Flanged Process
General Data	• HVAC and industrial applications • Fitting all TBx and TSx • Threaded process connection	• HVAC and industrial applications • Fitting all TBx and TSx • Welded process connection	• Process applications • DIN / ISO / ANSI / Flanges • Threaded connections (NPT or G)
Industries	Water / Waste water Machinery HVAC	Water / Waste water Machinery HVAC	Oil & gas / Chemical water / Waste water energy
Process Temperature	Max. 650°C	Max. 650°C	Max. 600°C (Depending on process pressure)
Max. Pressure	Max. 250 Bar	Max. 250 Bar	Max. 400 Bar (Depending on process temperature)
Materials	Brass Steel Stainless steel	Steel Stainless steel	Stainless steel
Length (mm)	50 ... 1000	50 ... 1000	100 ... 1000
For Immersion Tube Ø (mm)	4, 6, 8	6, 8	7 to 18

*Specification given are subject to changed without further notice.

TEMPERATURE SWITCH

MERCOID
Tel: 03-5569 2933 (6 Lines) Fax: 03-5569 2588, 5569 2788
Email: mercoid@mercoid.com.my, valmicro@valmicro.com.my
http://www.mercoid.com.my

General Duty Temperature Switch

Main Features
- Excellent repeatability
- Dead band adjustment for regulation
- Fix dead band for control and alarm
- Capillary 1 to 20 meters

Explosion Proof Temperature Switch

Main Features
- Excellent repeatability
- Dead band adjustment for regulation
- Fix dead band for control and alarm
- Explosion proof hazardous areas 1, 2, 21, 22

APPLICATION

Suitable for power generation safety equipment

SPECIFICATION - TECHNICAL DATA

Temperature Switch Type	General Duty	Explosion Proof
Temperature Range	-46 ... 0ºC to 200 ... 270ºC -46 ... 0ºC to 200 ... 270ºC	
Temperature	Process : -46 ... +270ºC / Ambient : -30 ... +55ºC / Storaget : -40 ... +55ºC	
Repeatability	± 1% F.S. / Constant temperature cycle	
CE Conformity	Low voltage directive 2014/35/EU	Low voltage directive 2014/35/EU ATEX Directive 2014/34/EU
Protection Ring	IP 66 (EN 60529)	
Process Connection	Stainless steel 1.4404 (316L)	
Bulb	Stainless steel 1.4435 / 1.4404 (316L)	Stainless steel 1.4404 (316L)
Capillary	RTA : Copper alloy / RTN : Stainless steel 1.4404 (316L) Capillary without protection / with Stainless steel protection / with PVC coating	
Scale	Internal. accuracy on reading ± 5% F.S.	
Cover / Housing	Zamak blue painted Captive stainless steel screws	Type RA80, Explosion proof, Flameproof Aluminium epoxy painted Captive stainless steel screws
Case	Black zamak	-
Mounting	Wall mounting bracket	3 back lugs for wall mounting
Ground Connection	Via internal terminal block	
Electrical Connection	Terminal block with plastic cable gland for Ø 7 to 10.5mm	Terminal block with metallic cable gland for Ø 7 to 12mm standard
Electrical Function	1/2 - SPDT - Std. / Hermetically / Ultra sensitive / Gold contact switch	
Adjustment	2 external adjustment screws on top of the case for set point and dead band	
Approval	-	Certificate LCIE 03 ATEX 6231X (Type RA80), IECEx LCIE 15.0061X Classification CE, Ex II 2 G D, Ex d IIC T6 or T5 GB, Ex tb IIIC IIC T8 ºC or T95 ºC Db Tº ambient -20 ºC to +60 ºC (T6 or T8 ºC) or -20 ºC to +70 ºC (T5 or T95 ºC)
Options	• Customer specific set point adjustment Code SETP • Mounting on 2" pipe Code 0407 • Stainless steel tag plate and wire Code 9941 • Lead seal of the adjustment screws Code 8990 • Nuclear cleanliness (RTN only) Code 0838 • Electrical connection : Stainless steel connector (Souriau) Code 2298 • Mobile plug for stainless steel connector (Souriau) Code 2249	• Customer specific set point adjustment Code SETP • Mounting on 2" pipe Code 0407 • Stainless steel tag plate and wire Code 9941 • Lead seal of the adjustment screws Code 8990 • Nuclear cleanliness (RTN only) Code 0838

*Specification given are subject to changed without further notice.

OTHERS

TANK PROTECTION DEVICE | FOOT VALVE | KNIFE GATE VALVE | LINE VALVE & FITTING | DUCTILE IRON VALVE | BRONZE VALVE | MARINE VALVE | HVAC / FIRE FIGHTING / PLUMBING / WATER WORKS

Tank Protection Device

The filling and emptying cycles of tanks and vessels causes change to the liquid volume and vapour space and this together with fluctuating operating temperatures and pressures, results in the need for pressure protection equipment. Situations where a tank or vessel may be vulnerable to engulfment by fire could result in the need for large volumes of vapour to be rapidly vented in order to protect the tank and its environment. Safety devices, such as high level alarms or control systems, can malfunction, leading to catastrophic failure of the tank. This can result in critical injuries, loss of product and severe environmental damage. Accordingly, fail-safe devices, such as Pressure/Vacuum relief valve, Emergency Relief Vent, and/or other venting relief devices such as bursting discs should be fitted in addition to flame arrester where these may be required.

Foot Valve

A foot valve is a type of check valve that is typically installed at a pump or at the bottom of a pipe line (hence the name). Foot valve act like ball check valve, but have an open end with a shield or screen over it to block debris from entering the line.

Knife Gate Valve

Knife gate valve is used to slice through sludge or sewerage and a gate is used fro normal positive shut off. It is a get valve design that is distinguished from the standard design by the use of a simple metal plate for the gate and the absence of a bonnet; also called a slide valve. Knife gate valve is a uni-directional or bi-directional valve designed for general industrial service applications. Knife gate valve used for pressure tight isolation of solid-liquid mixes in water and waste water treatment plants and pumping stations, paper and pulp plants, power plants and mining industry.

Lined Valve & Fitting/ Ductile Iron Valves/ Bronze Valve/ Marine Valve/ HVAC/ Fire Fighting/ Plumbing/ Water Works

Various other valves & fittings for all Industries and applications are also available with international and local approvals & certifications.

MERCOID
Tel: 03-5569 2933 (6 Lines) Fax: 03-5569 2588, 5569 2788
Email: mercoid@mercoid.com.my, valmicro@valmicro.com.my
http://www.mercoid.com.my

DEVICES INSTALL ILLUSTRATION

Pressure & Vacuum Relief Valve (Breather Valve)

Direct acting pressure/vacuum relief valves (also known as breather valves, conservation vents, or safety vents) are low pressure devices specifically designed to protect tanks, process systems and equipment from excessive pressure and vacuum.

As well as providing the primary layer of protection for tanks and process systems, pressure/vacuum valves also minimize emission losses of gases or vapors, thus protecting the environment and providing significant financial savings.

The range includes pressure only, vacuum only and combined pressure/vacuum valves, all available with flanged outlets or vented to atmosphers.

Flame Arrester

Flame arresters are fitted to the opening of an enclosure or to the connecting pipework of a system of enclosures and whose intended function is to allow flow but prevent transmission of a flame. Whenever a flammable gas or vapour is mixed with air/oxygen, there is the potential for an explosion in case of an accidental ignition. It is commonly used in fuel storage tank vents, fuel gas pipeline, burner inlet line, exhaust systems, vapour recovery systems, process pipelines, etc.

Type of flame arresters
1. End-of-line deflagration arresters
2. In-line deflagration arresters
3. in-line detonation arresters

Emergency Relief Vent & Access Mainways

Non-sparking emergency relief vents permit access to low pressure storage tanks whilst providing emergency venting capacity in the event of fire. These vents are used extensively on bulk storage tanks, including floating roof tanks.

Size range from 10" (250mm) to 24" (600mm). Typical applications include: bulk storage tanks, low pressure gas pipeline systems, digesters and gas holders.

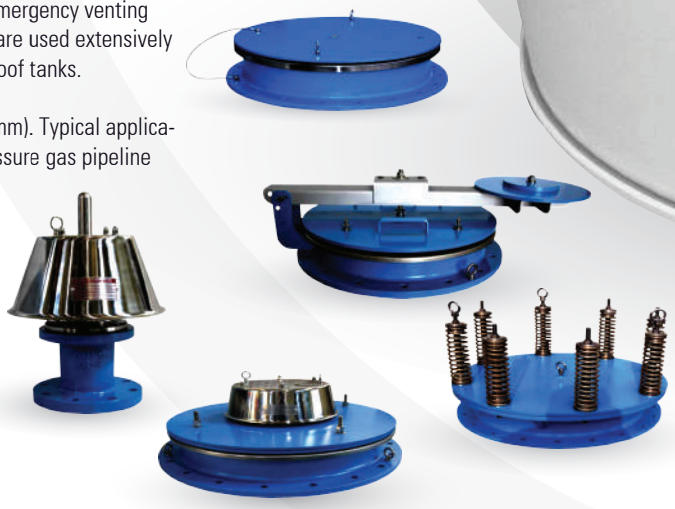

*Specification given are subject to changed without further notice.

TANK, SAFETY & PROTECTION DEVICE

ALUMINIUM / CARBON STEEL / STAINLESS STEEL

WINTECH PROSAVE FDC FDC Co., Ltd. TOPSAFE

Pilot Operated P/V Valve
The pilot operated pressure side which permits tank operating pressures closer to the maximum allowable operating pressure. This provides a more positive control over vapor generation inherent in fluids with higher vapor pressures. The vacuum side of the vent is weight loaded and allows intake of air when necessary to remain within the vacuum design rating of the tank.

1. Pressure & Vacuum Relief Valve (Breather Valve)
2. Flame Arrester
3. Emergency Relief Vent & Access Mainways
4. Gauge Hatch Cover Pressure Relief
5. Inlet Gas Blanketing Valve
6. Pilot Operated P/V Valve

Tank Blanketing Valve
Tank Blanketing valves offer complete protection to the storage tank product against contamination and to the storage tank itself against rupture or damage. This type of valve is mainly used in the chemical, bulk storage and pharmaceutical industries to reduce emissions and lower the cost of production loss.

In addition to preventing outside air and moisture from entering the storage vessel, a blanket gas pressure reduces the evaporation of the stored product to a negligible amount.

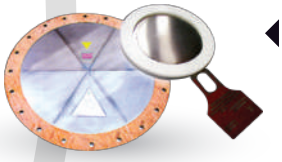

Rupture Disc
Situations that demand a Rupture Disc

- In case there is any concern that there can be an abrupt rise in pressure that cannot be endured by a spring type safety valve.
- In case there is any concern that fixtures generated by the operation state may damage the operation function of other safety materials owing to excessive pressure.
- In case the leakage of oil reserved in a tank from a safety device is not permitted during an operation.
- In case there is a need to have a protective device in preparation for a container and pipe that reserves or produces oil of a strong corrosive nature.
- In case of handling or reserving materials that are likely to undergo a synthetic reaction.
- In case there is a possibility that an excessively high or low temperature in the operational environment might inhibit the operation of a safety valve.

Gauge Hatch Cover
The sampling and gauging hatch Cover, is designed, manufactured and tested according to the KSPC standard code. It is made to take the fluid samples from the storage tank, to measure the temperature, and to take test of the stored fluids

FOOT VALVE

CAST IRON / STAINLESS STEEL

VARIMEX Valves® CO. LTD.

MERCOID
Tel: 03-5569 2933 (6 Lines) Fax: 03-5569 2588, 5569 2788
Email: mercoid@mercoid.com.my, valmicro@valmicro.com.my
http://www.mercoid.com.my

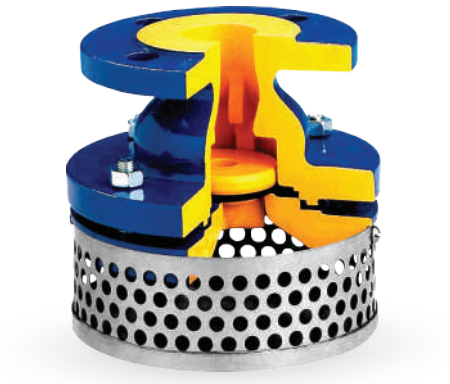

FIG 935

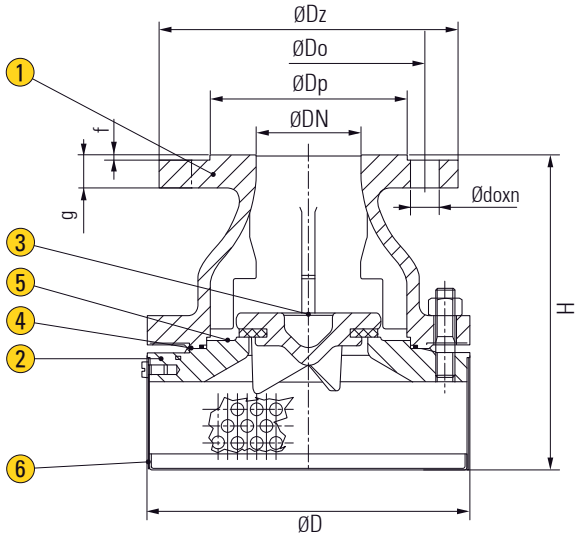

APPLICATION

Suitable for industrial cold and hot water, neutral fluids.

SPECIFICATION

End Connection	Flanged end to DIN 2526 PN16
Pressure Rating	PN16
Working Temperature	Up to 90°C
Test Pressure (Hydrostatic)	Body - 24 Bar Seat - 17.6 Bar

MATERIAL

Parts		Fig. 935 - Cast Iron	Fig. 935 - Stainless Steel
1	Body	EN-GJL-250	Stainless steel 1.4031 / 1.4408
2	Bonnet		
3	Disc		
4 / 5	Gasket	EPDM	PTFE
6	Screen	Stainless steel 1.4301	Stainless steel 1.4408

* Note : Screen bottom without holes - DIN 3259

DIMENSIONS

Unit : mm

Size (DN)	D	Dz	Dp	Do	g	f	do	n	H	Weight (Kg)
40	170	150	84	110	18	3	19	4	155	8.5
50	180	165	99	125	20	3	19	4	175	9.5
65	200	185	118	145	20	3	19	4	215	12.5
80	240	200	132	160	22	3	19	8	265	18.0
100	270	220	156	180	22	3	19	8	315	26.0
125	310	250	184	210	24	3	19	8	335	32.5
150	360	285	211	240	24	3	23	8	415	43.0
200	440	340	266	295	26	3	23	8	500	74.0
250	520	395	319	350	28	3	23	12	625	107.0
300	570	445	370	400	28	4	23	12	785	150.0

* Note : Mesh = Ø 8mm

*Specification given are subject to changed without further notice.

MERCOID
Tel: 03-5569 2933 (6 Lines) Fax: 03-5569 2588, 5569 2788
Email: mercoid@mercoid.com.my, valmicro@valmicro.com.my
http://www.mercoid.com.my

KNIFE GATE VALVE

CAST IRON / DUCTILE IRON / STAINLESS STEEL

VARIMEX Valves® CO. LTD.

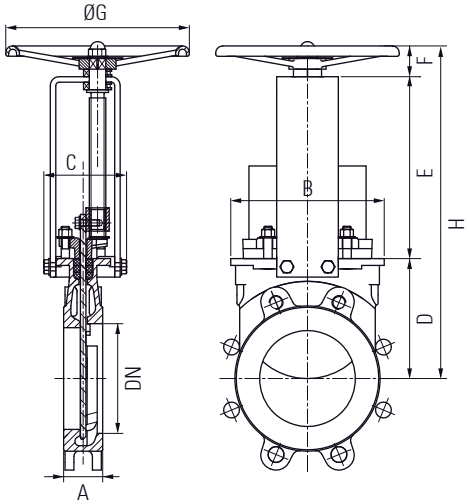

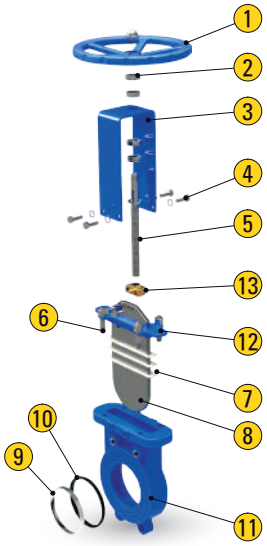

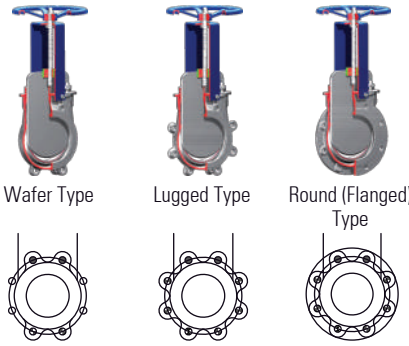

Wafer Type | Lugged Type | Round (Flanged) Type

Options:

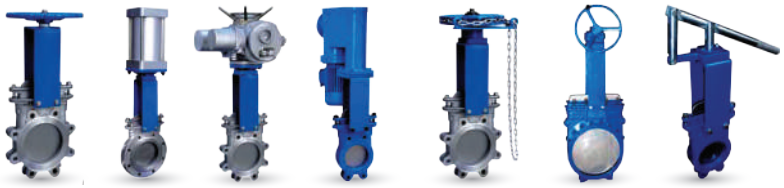

Handwheel | Pneumatic Cylinder | Electric | Electric-hydraulic | Chain Wheel | Gear Box | Lever

APPLICATION

Suitable for water, steam, oil, gases, abrasive and non-abrasive media (Refer to corrosion resistance table for valve materials selection).

SPECIFICATION

Design Standard	MSS SP-81
Flange Standard	DIN PN10, PN16, 150LB, JIS 10K, TABLE E/D
Face to Face	MSS SP-81
Testing Standard	API-598

MATERIAL

	Parts	Material
1	Hand Wheel*	Malleable Steel
2	Bearing	ZChSnSb 10-6
3	Yoke	Q235
4	Bolt	SS201 / SS304
5	Stem	2Cr13 / SS304
6	Bolt & Nut	SS201 / SS304
7	Packing	PTFE
8	Gate Disc	SS201 / SS304 / SS316
9	Metal Ring	Q235 / SS304 / SS316
10	Seat	EPDM / PTFE / Metal
11	Body	GGG40 / WCB / CF8 / CF8M / CF3M / F53 / F55
12	Gland Packing	GGG40 / WCB / CF8 / CF8M / CF3M / F53 / F55
13	Stem Nut	Brass

* Note : Electric, Pneumatic, Hydraulic, Sprocket, Electro-hydraulic, gear are available on request

DIMENSIONS

Unit : mm

Size (DN)	A	B	C	D	E	F	ØG	H
50	48	130	112	115	158	47	180	320
65	48	150	117	115	172	53	180	340
80	51	176	117	127	190	53	220	370
100	51	192	127	140	210	60	240	410
125	57	221	127	160	235	65	240	460
150	57	225	131	175	270	65	280	510
200	70	283	141	205	320	65	300	590
250	70	350	151	245	390	65	340	700
300	76	402	151	295	443	65	340	803
350	76	454	160	335	494	70	400	899
400	89	500	175	392	552	76	450	1020
450	89	564	190	435	585	80	530	1100

*Specification given are subject to changed without further notice.

LINE VALVE & FITTING

MERCOID
Tel: 03-5569 2933 (6 Lines) Fax: 03-5569 2588, 5569 2788
Email: mercoid@mercoid.com.my, valmicro@valmicro.com.my
http://www.mercoid.com.my

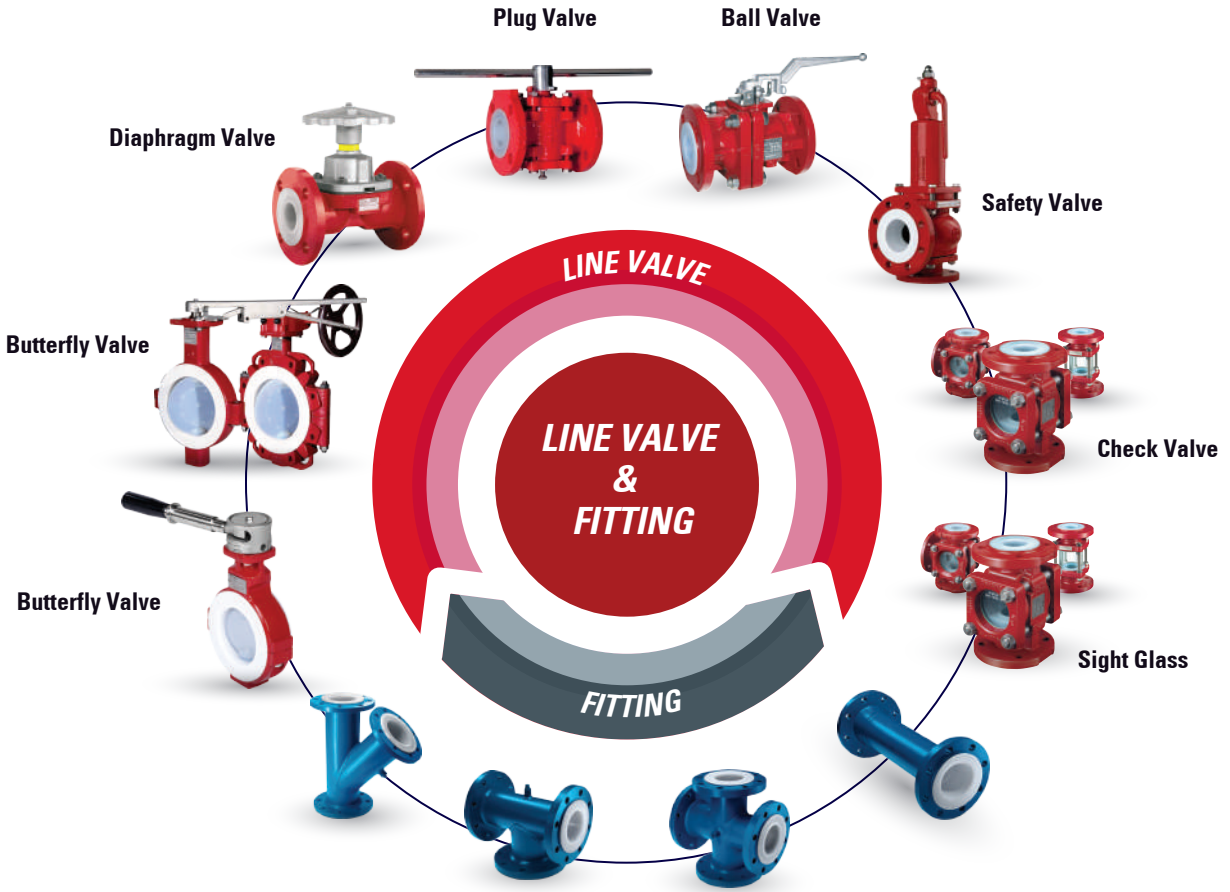

DUCTILE IRON VALVE

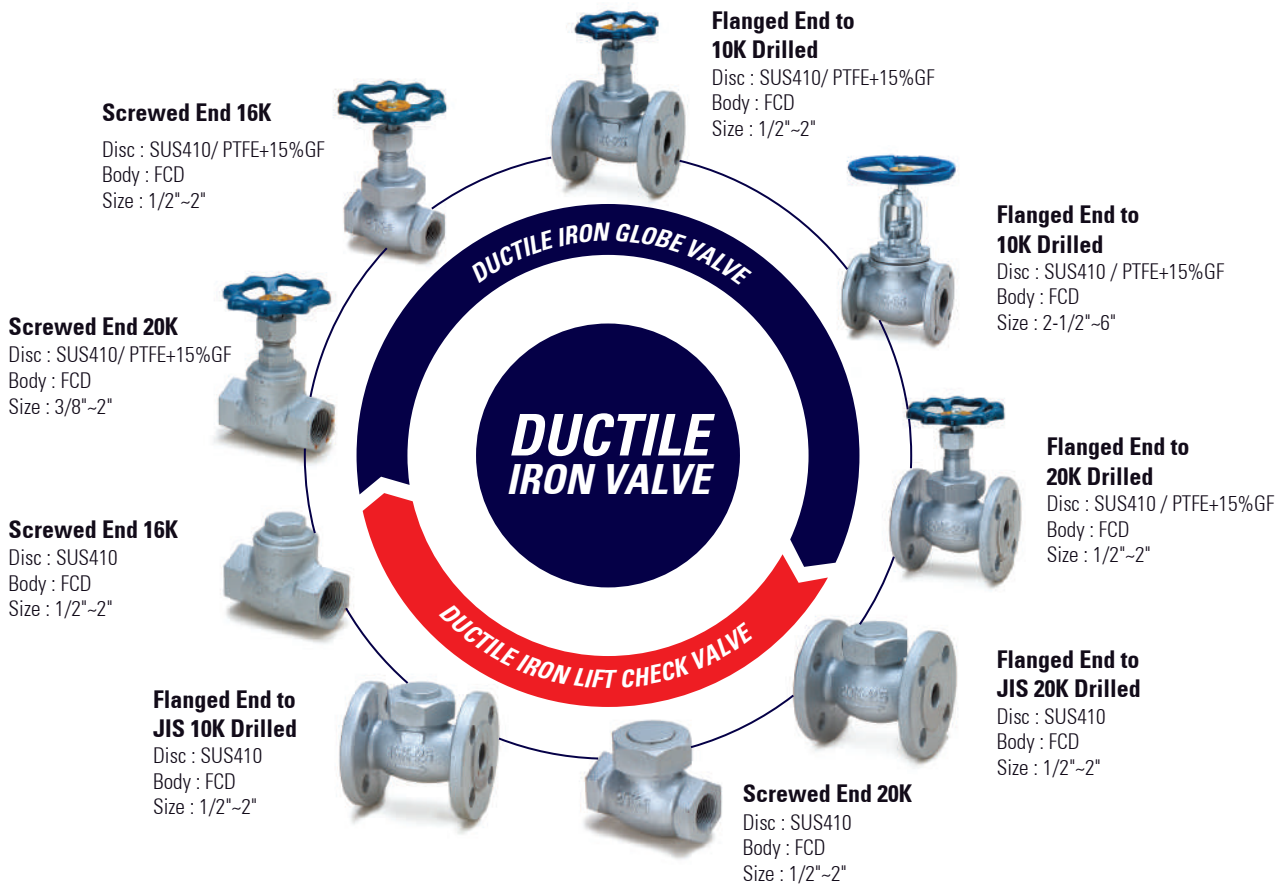

*Specification given are subject to changed without further notice.

MERCOID
Tel: 03-5569 2933 (6 Lines) Fax: 03-5569 2588, 5569 2788
Email: mercoid@mercoid.com.my, valmicro@valmicro.com.my
http://www.mercoid.com.my

BRONZE VALVE

Gate Valve - No Rising / Rising Stem

Materials
Body, Bonnet and Wedge disc : Bronze
Stem : Brass
Packing : PTFE
Size Range : 1/2" to 6"
Class : 125/200 (PN16)
150/300/600 (PN20/25/50)

Production Standard MSS SP-80

Gate Valve - No Rising Stem

Materials
Body, Bonnet and Wedge disc : Bronze
Stem : Brass
Packing : PTFE
Size Range : 1/2" to 8"
Class : 125/200 (PN16)
150/300/600 (PN20/25/50)

Production Standard MSS SP-80

Lift / Swing / Vertical Lift Check Valve

Materials
Body, Bonnet and Disc : Bronze
Size Range : 1/2" to 4"
Threaded ends BSP or NPT
Class : 125/200 (PN16), 150/300 (PN20),
200/400 (PN25), 300/600 (PN50)

Production Standard MSS SP-80

Globe Valve

Materials
Body, Bonnet and Disc : Bronze
Stem : Brass
Packing : PTFE
Size Range : 1/2" to 4"
Threaded ends BSP or NPT
Class : 125/200 (PN16), 150/300 (PN20),
200/400 (PN25), 300/600 (PN50)
Option : Metallic disc
PTFE Renewable disc

Production Standard MSS SP-80

Globe Valve / Angle Valve

Materials
Body, Metallic disc and Bonnet : Bronze
Stem : Brass
Packing : PTFE
Size Range : 1/2" to 4"
Flanged ends
Class : 150/225 (PN20)
Option : Screwed in bonnet
Stop check type disc

Production Standard MSS SP-80

MARINE VALVE

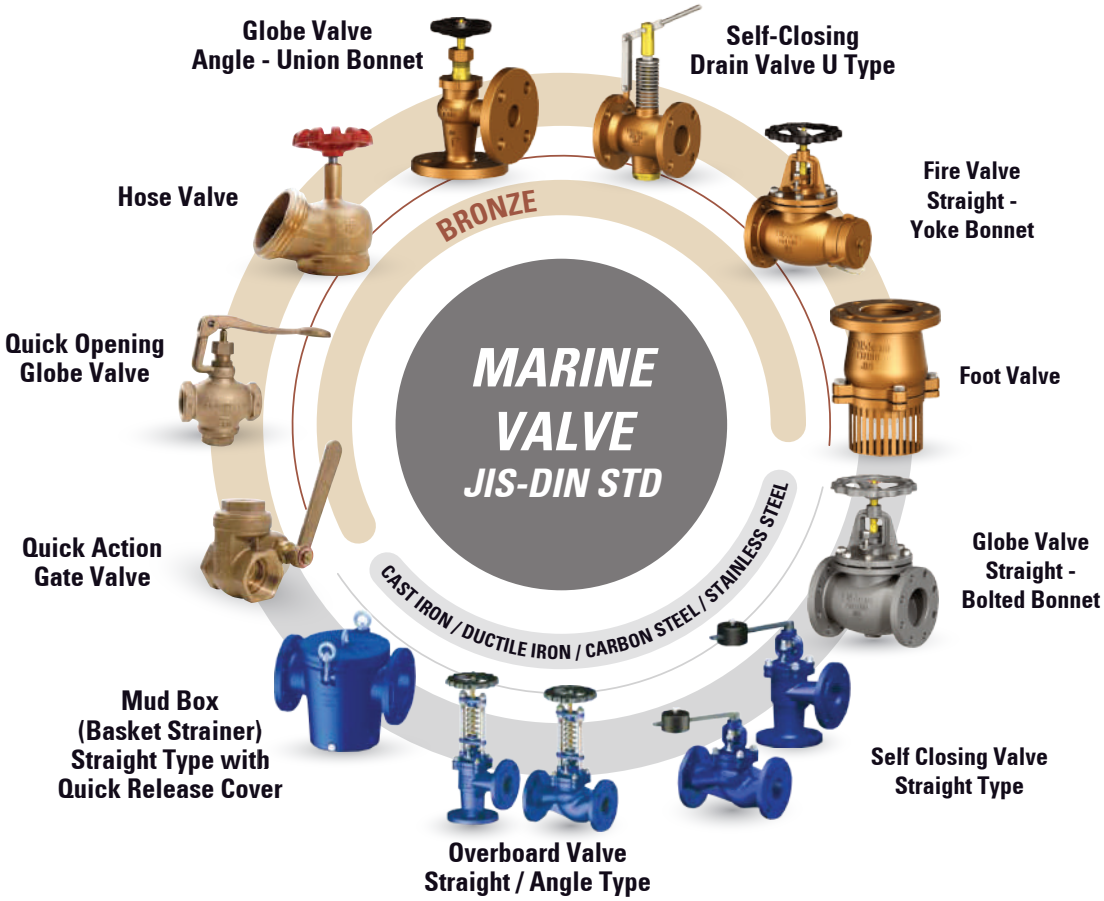

*Specification given are subject to changed without further notice.

THERMOPLASTIC VALVE & FITTING

MERCOID
Tel: 03-5569 2933 (6 Lines) Fax: 03-5569 2588, 5569 2788
Email: mercoid@mercoid.com.my, valmicro@valmicro.com.my
http://www.mercoid.com.my

MATERIAL - CPVC / UPVC (Type I, Grade I, NFS approved) / PVC / PVDF / PP, PP Fiberglass / ABS / EPDM, FPM, NBR

APPLICATION - Industrial production / Chemical production / Water treatment / Irrigation / Fish cultivation / Pool and spa / General plumbing

SANITARY VALVE & FITTING

*Specification given are subject to changed without further notice.

MERCOID
Tel: 03-5569 2933 (6 Lines) Fax: 03-5569 2588, 5569 2788
Email: mercoid@mercoid.com.my, valmicro@valmicro.com.my
http://www.mercoid.com.my

HVAC / FIRE FIGHTING / PLUMBING / WATERWORKS

HVAC

Control Valve

Balancing Valve

Three-Port Control Valve

Differential Pressure Controller

FIRE FIGHTING

Deluge Valve

Swing Check Valve

Y-Type Strainer

System Equipment & Valve

UL LISTED

FM APPROVED

PLUMBING

Angle Style Water Hammer Arrester

"I" Style Water Hammer Arrester

"L" Style Water Hammer Arrester

Full Open Silence Check Valve

Piston Pressure Reducing Valve

Pump Control Valve

Pump Control Valve

WATERWORKS

Butterfly Valve

Float Valve

Pressure Reducing Valve

Gate Valve

SPAN

MS SIRIM

*Specification given are subject to changed without further notice.

FLANGES | PIPES | FITTINGS

Distributor for pipe, flanges, and fittings for industries ranging from Oil & Gas to Construction and Mechanical. Our wide range of products include welded pipes in stainless steel and carbon, high pressure tube fittings, industrial pipe flanges and much more. All products we supply meet industrial standards such as ASTM, ASME, API, UNS, SB, DIN and JIS to ensure that we can serve every customer's project standards and requirements.

In addition to our full line of steel pipes, fittings, and flanges, we offer a wide range of services to tailor products to your specifications. Our services include threading, fabricating, & coating.

MERCOID
Tel: 03-5569 2933 (6 Lines) Fax: 03-5569 2588, 5569 2788
Email: mercoid@mercoid.com.my, valmicro@valmicro.com.my
http://www.mercoid.com.my

FLANGES / PIPES / FITTINGS AND ACCESSORIES

FLANGES

Slip-on, Weld neck, Blind type, Socket weld, Threaded type, Lap joint type & etc.

Size Range	1/2" to 60" (15mm to 1500mm)
Material	Forged steel A105N, Carbon steel, Stainless steel, Mild steel and etc.

Standards
ANSI B16.5 Class150, Class 300, Class 600 and etc.
DIN PN16, PN40
JIS 10K, 20K
BS 10 Table "E", "H", "K" and etc.

Country of Origin **Japan, USA, Korea, China and etc.**

SEAMLESS & WELDED PIPE

CARBON STEEL / STAINLESS STEEL / MILD STEEL

Carbon Steel Pipes
API 5L Gr.b, A106B, SA 106, X42, X52, X60 & etc.

Size Range	3/8" to 48" (10mm to 1200mm)
Wall Thickness	Sch 10 - Sch 160, xs,xxs & etc.

Stainless Steel Pipes
304/304L, 316/316L

Size Range	1/2" to 24" (15mm to 600mm)
Wall Thickness	Sch 10 - Sch 160, xs,xxs & etc.

Mild Steel Pipes
304/304L, 316/316L

Size Range	1/2" to 16" (15mm to 400mm)
Wall Thickness	Light (Class A), Medium (Class B), Heavy (Class C)

Country of Origin **Japan, Europe, USA, Korea, China, South Africa, Romania, Brazil, Argentina and etc.**

FITTINGS

ANSI B16.9, ASTM A234WPB and ASTM A420WLP 6

Size Range	1/2" to 48" (15mm to 1200mm)
Material	Carbon steel, Stainless steel, Mild steel and etc.
Wall Thickness	Sch 10 - Sch 160, xs,xxs & etc.

Type of Fitting Available

Elbow (90° & 45°)	Union
Con Reducer & Eccentric Reducer	Coupling
Equal Tee & Reducing Tee	Weldolet
End Cap	Threadolet
Nipple	Nipolet
and etc.	

Country of Origin **Japan, USA, Korea, China and etc.**

ACCESSORIES

Spiral Wound Gasket

Ring Gasket

Hoses & Couplings

Stud Bolt

Insulating Kits

*Specification given are subject to changed without further notice.

CORROSION RESISTANCE TABLE

MERCOID
Tel: 03-5569 2933 (6 Lines) Fax: 03-5569 2588, 5569 2788
Email: mercoid@mercoid.com.my, valmicro@valmicro.com.my
http://www.mercoid.com.my

Chemical Agents	Metal					Elastomer			
	Carbon Steel	Cast Iron	AISI 304	AISI 316	Bronze	EPDM	NBR	Viton	Natural Rubber
ACETALDIHYDE	U	E	E	E	U	G	U	-	F
ACETIC ACID 50% 50°C	U	U	E	E	F	U	U	U	U
ACETONE	E	G	E	E	E	G	U	U	U
ACETYLENE	E	G	E	E	E	G	U	U	U
AIR	E	E	E	E	E	E	E	-	E
ALCOHOL - BUTYL	G	F	E	E	E	-	F	-	-
ALCOHOL - ETHYL	G	U	E	E	G	E	G	G	G
ALCOHOL - METHYL	F	U	E	E	E	E	G	U	G
ALUMINUM CHLORIDE 10%	U	U	U	F	U	E	E	E	E
ALUMINUM FLUORIDE	U	U	G	G	U	-	G	G	-
ALUMINUM HYDROXIDE	U	U	G	G	U	-	G	G	-
ALUMINUM SULPHATE	U	U	F	G	U	-	E	-	-
AMINES	G	U	E	E	U	-	F	-	-
AMMONIA (ANHYDROUS)	G	F	G	E	U	E	G	U	-
AMMONIUM HYDROXIDE	U	U	G	E	U	E	U	G	U
AMMONIUM NITRATE 5%	U	F	G	E	U	-	E	-	-
AMMONIUM PHOSPHATE	F	U	G	G	U	E	E	-	G
AMMONIUM SULPHATE	F	U	G	G	U	E	E	E	-
AMYL ACETATE	F	F	G	E	E	-	U	F	U
ANILINE 90% 20°C	F	F	G	E	F	G	U	G	U
ASPHALT	E	E	E	E	E	-	U	E	U
BARIUM CARBONATE 15°C	G	U	E	E	G	E	E	-	-
BARIUM CHLORIDE	F	U	G	G	G	E	E	E	E
BARIUM HYDROXIDE	F	F	G	E	U	-	E	-	U
BARIUM SULPHATE	F	F	G	E	F	E	E	E	E
BARIUM SULPHIDE	F	F	G	E	F	-	E	-	-
BEER SUGAR SOLUTION	G	U	E	E	G	-	E	-	-
BENZENE (BENZOL) 20°C	G	U	E	E	G	U	U	G	U
BENZOIC ACID 5%	U	U	E	E	U	-	F	-	-
BORIC ACID 5% 90°C	U	U	G	E	F	E	E	-	-
BROMINE - DRY	U	U	U	U	U	U	U	G	U
BROMINE - WET	U	U	U	U	U	U	U	G	U
BUTADIENE	F	F	G	E	U	-	G	G	-
BUTANE - BUTYLEAE	G	G	G	E	E	U	G	G	U
CALCIUM CARBONATE	F	F	E	E	F	E	E	E	E
CALCIUM CHLORIDE	F	F	F	G	G	E	E	E	G
CALCIUM HYDROXIDE 50%	F	F	E	E	U	E	E	E	E
CALCIUM SULPHATE	F	F	E	E	E	E	E	E	E
CARBON DIOXIDE - WET	F	F	E	E	G	G	G	E	G
CARBON TETRACHLORIDE	F	U	G	G	F	U	U	E	U
CARBONIC ACID	U	U	G	G	U	-	E	-	-
CHLORINE GAS - DRY 20°C	G	U	G	G	F	U	U	E	U
CHLOROBENZENE - DRY	F	F	E	E	F	U	U	G	U
CHROMIN ACID 5% 20°C	U	U	G	G	U	U	U	E	U
COPPER SULPHATE	U	F	G	E	U	E	E	E	G
DIESEL FUEL	E	G	E	E	G	U	E	E	-
ETHERS	G	U	E	E	G	U	U	-	U
ETHYL ACETATE	G	F	G	G	F	G	U	U	U
ETHYL CHLORIDE 5%	G	F	E	E	G	E	E	E	F
ETHYL GLYCOL	G	G	G	E	G	E	E	E	G
ETHYLENE OXIDE	G	G	G	E	G	U	U	U	U
FATTY ACID	U	U	G	E	-	U	E	-	-
FERRIC NITRATE	U	U	G	E	-	G	F	-	-
FERRIC SULPHATE 5%	U	U	G	G	U	-	E	E	-
FERROUS SULPHATE	U	F	E	E	U	G	E	G	G
FORMALDEHYDE 20°C	U	U	F	G	F	E	G	U	-
FORMIC ACID 5% 65°C	U	U	F	E	G	U	U	U	U
FRUIT JUICES	U	U	E	E	G	G	G	-	-
FUEL OIL	G	F	E	E	G	U	F	E	U
GASOLINE	E	U	E	E	G	U	E	E	U

Chemical Agents	Metal					Elastomer			
	Carbon Steel	Cast Iron	AISI 304	AISI 316	Bronze	EPDM	NBR	Viton	Natural Rubber
GLUCOSE	-	U	E	E	G	-	E	E	-
GLYCERINE / GLYCEROL	F	F	E	E	G	-	E	E	-
HEPTANE	U	F	G	G	F	U	E	E	U
HYDROGEN	F	F	E	E	F	E	E	E	E
HYDROGEN PEROXIDE 90%	U	U	G	G	U	-	U	G	U
HYDROGEN SULFIDE	F	F	G	G	F	E	U	U	U
IODINE SOLUTION	U	U	U	U	U	-	U	F	U
KEROSENE	G	G	E	E	E	U	E	E	U
LACTIC ACID 5%	U	U	G	G	F	-	F	-	-
LUBRUCATING OIL	E	E	E	E	E	U	E	E	U
MAGNESIUM CHLORIDE 4%	G	F	F	G	F	E	E	E	E
MAGNESIUM HYDROXIDE	G	F	E	E	G	E	G	E	G
MAGNESIUM SULPHATE	G	F	E	E	G	E	E	E	G
MERCURY	E	E	E	E	U	E	E	E	E
METHYL CHLORIDE	G	G	G	E	E	U	U	E	U
MILK	U	U	E	E	E	E	E	E	E
MINERAL OIL	F	F	E	E	-	U	E	E	U
NAPTHALENE	E	F	G	G	G	U	U	G	U
NATURAL GAS	G	G	E	E	E	U	E	E	U
NICKEL CHLORIDE	U	U	G	G	-	-	E	-	-
NITRIC ACID < 40% 20°C	U	U	E	E	U	U	U	E	U
NITRIC ACID > 40% 20°C	U	U	G	E	U	U	U	F	U
NITROBENZENE	G	U	G	G	-	U	U	G	U
OLEUM	G	U	F	G	-	U	U	E	U
OXALIC ACID	F	U	G	E	G	G	U	G	U
PALMITIC ACID	-	U	G	E	G	-	E	-	-
PETROLEUM	-	U	G	G	F	U	E	E	U
PHENOL	U	U	E	E	E	U	U	E	U
PHOSPHORIC ACID 5%	U	U	G	G	U	F	E	E	F
POTASSIUM CYANIDE	G	F	G	G	U	-	E	E	-
POTASSIUM HYDROXIDE 5%	F	F	G	G	G	-	E	E	-
POTASSIUM NITRATE	F	F	G	E	F	-	E	E	-
POTASSIUM SULFITE	E	U	G	G	G	E	F	E	E
PROPANE	G	F	G	G	E	G	E	-	-
RESINS	G	U	G	G	G	U	-	E	-
SEA WATER 20°C	F	U	G	G	G	-	G	G	F
SODIUM ACETATE 5%	U	U	E	E	G	E	G	E	-
SODIUM CHLORIDE 30%	F	U	G	G	G	E	E	U	-
SODIUM FLUORIDE	F	U	F	G	F	E	-	E	E
SODIUM HYDROXIDE 50%	U	U	G	G	U	-	U	E	-
SODIUM HYPOCHLORITE 5%	F	U	U	G	U	G	U	U	U
SODIUM NITRATE	U	U	G	E	G	G	G	E	U
SODIUM PEROXIDE	G	U	G	E	U	E	G	-	G
SODIUM PHOSPHATE 5%	F	U	G	E	F	E	E	E	G
SODIUM SILICATE	F	U	G	E	G	E	E	E	E
SODIUM SULFITDE 70%	G	U	G	E	U	E	-	E	E
STEAM 150°C	G	G	E	E	G	-	U	E	-
STERARIC ACID 90% 90°C	E	U	E	E	F	G	G	G	U
SULPHUR DIOXIDE	-	U	G	E	F	-	U	-	-
SULPHUROUS ACID 80%	G	U	F	U	F	G	U	E	U
TARTARIC ACID 65°C	U	U	G	E	G	U	E	E	U
TRICHLOROETHYLENE	U	-	G	E	E	-	U	-	G
TURPEMTINE	G	U	G	E	G	U	U	E	U
WATER - DEMINERALIZED	G	U	E	E	E	U	G	E	U
WATER - DISTILLED	U	U	E	E	U	E	G	E	G
WATER - FRESH	U	F	E	E	E	E	G	-	-
WATER - SEWAGE	F	F	E	E	E	E	G	-	E
XYLENE, XYLOL	F	F	E	E	G	E	U	-	-
ZINC CHLORDE 5% 70°C	G	U	F	F	U	U	E	E	U
ZINC SULPHATE 25% 80°C	U	U	E	E	G	E	E	E	E

E : Excellent | G : Good | F : Fair | U : Unsatisfactory | - : No data

*Specification given are subject to changed without further notice.

MERCOID
Tel: 03-5569 2933 (6 Lines) Fax: 03-5569 2588, 5569 2788
Email: mercoid@mercoid.com.my, valmicro@valmicro.com.my
http://www.mercoid.com.my

PRESSURE - TEMPERATURE
HYDROSTATIC TEST PRESSURE ACCORDING TO ANSI B16.34

Service Temperature		Class 150 / PN 20					Class 300 / PN 50					Class 600 / PN 100					Class 600 / PN 100				
°F	°C	WCB	WC6	WC9	CF8	CF8M	WCB	WC6	WC9	CF8	CF8M	WCB	WC6	WC9	CF8	CF8M	WCB	WC6	WC9	CF8	CF8M
-20 to100	-29 to38	284	290	290	276	284	741	750	750	719	719	1480	1499	1499	1438	1340	2221	2249	2249	2159	2159
122	50	278	278	278	267	278	726	741	742	693	697	1453	1483	1485	1388	1396	2178	2224	2227	2081	2094
212	100	257	257	257	228	257	673	708	711	593	612	1346	1414	1422	1186	1224	2017	2121	2133	1778	1836
302	150	229	229	229	202	229	655	673	676	526	558	1312	1344	1353	1054	1117	1968	2017	2029	1581	1675
392	200	203	203	203	183	203	632	660	650	476	518	1270	1320	1301	950	1034	1907	1978	1950	1425	1552
482	250	175	175	175	170	175	605	645	641	443	484	1209	1344	1282	886	969	1815	1934	1924	1328	1453
572	300	148	148	148	148	148	561	615	615	422	458	1124	1231	1231	842	918	1685	1846	1846	1264	1376
622	350	122	122	122	122	122	537	583	583	408	441	1072	1167	1167	813	882	1608	1750	1750	1221	1324
707	375	107	107	107	107	107	529	563	563	403	431	1057	1125	1125	805	861	1586	1688	1688	1208	1292
752	400	94	94	94	94	94	500	531	531	399	422	1001	1061	1061	796	844	1501	1592	1592	1195	1266
797	425	81	81	81	81	81	418	509	509	394	416	834	1081	1081	787	831	1251	1527	1527	1182	1247
842	450	68	68	68	68	68	290	490	490	391	407	581	980	980	779	815	871	1470	1470	1169	1221
887	475	54	54	54	54	54	196	460	460	386	397	383	918	918	770	793	589	1378	1378	1156	1190
932	500	41	41	41	41	41	128	403	403	378	389	255	806	806	755	779	383	1209	1209	1134	1167
Shell Test		450 PSIG			425 PSIG		1125 PSIG			1100 PSIG		2225 PSIG			2175 PSIG		3350 PSIG			3250 PSIG	
Seat Test	Fluid	325 PSIG					825 PSIG			800 PSIG		1650 PSIG			1600 PSIG		2450 PSIG			2400 PSIG	
	Gas	80 PSIG					80 PSIG					80 PSIG					80 PSIG				

PRESSURE - TEMPERATURE
RATING ACCORDING TO DIN EN 1092-1/2

Valves Material	Pressure	-60°C	-10°C	120°C	200°C	250°C	300°C	350°C	400°C	450°C
Cast Iron GJL-250	PN16	-	16 Bar	16 Bar	13 Bar	11 Bar	10 Bar	-	-	-
Ductile Iron GJS-400-18	PN25	-	25 Bar	25 Bar	20 Bar	18 Bar	16 Bar	15 Bar	-	-
Cast Steel GP240GH+N	PN40	20 Bar	40 Bar	40 Bar	35 Bar	32 Bar	28 Bar	24 Bar	21 Bar	18 Bar
Valves Material	Pressure	-60°C	-20°C	100°C	150°C	200°C	250°C	300°C	350°C	350°C
Stainless Steel 1.4408	PN16	8 Bar	16 Bar	13 Bar	11.5 Bar	10.5 Bar	9.5 Bar	9 Bar	8.3 Bar	8 Bar
Stainless Steel 1.4408	PN40	20 Bar	40 Bar	32 Bar	29 Bar	26 Bar	24 Bar	22 Bar	21 Bar	20 Bar

SHELL MATERIAL

Material	Symbol	Classification Steel	ASTM REF.	Recommended Temperature Limits		Application
				°C	°F	
WCB	A	Carbon	A216 Grade WCB	-29 to 425	-20 to 800	Steam, Water oil, Oil vapour gas and general service
LCB	B	Carbon	A352 Grade LCB	-46 to 350	-50 to 650	Low Temperature
LCC	C	Carbon	A352 Grade LLC	-46 to 350	-50 to 650	
WC6	D	Chromium moly 1.25% Cr, 0.5% Mo	A217 Grade WC6	-29 to 590	-20 to 1100	Steam, Water oil, Oil vapour gas and general service
WC9	E	Chromium moly 2.25% Cr, 1% Mo	A217 Grade WC9	-29 to 590	-20 to 1100	
C5	F	Chromium moly 5% Cr, 0.5% Mo	A217 Grade C5	-29 to 650	-20 to 1200	Corrosive / Erosive oil refinery service
CF8M	G	Stainless 18% Cr, 10% Ni, 2% Mo	A351 Grade CF8M	-29 to 590	-20 to 1100	High and low temperature corrosion resistance, Cryogenic is also available upon request
CF8	H	Stainless 18% Cr, 10% Ni	A351 Grade CF8	-29 to 590	-20 to 1100	
CF3M	I	Low carbon stainless 18% Cr, 10% Ni, 2% Mo	A351 Grade CF3M	-29 to 454	-20 to 850	
CF3	J	Low carbon stainless 18% Cr, 10% Ni	A351 Grade CF3	-29 to 425	-20 to 800	
CN7M	P	Stainless 19% Cr, 29% Ni	A351 Grade CNM	-29 to 425	-20 to 800	Corrosion resistance

*Specification given are subject to changed without further notice.

COMPARISON LIST FOR CASTING & FORGING

MERCOID
Tel: 03-5569 2933 (6 Lines) Fax: 03-5569 2588, 5569 2788
Email: mercoid@mercoid.com.my, valmicro@valmicro.com.my
http://www.mercoid.com.my

General Classification	Casting			Forgings		
	ASTM	JIS	BS	ASTM	JIS	BS
Cast Iron	A126-Class A	G5501-FC20	1452-14	-	-	-
	-Class B	-FC25	-17	-	-	-
	-Class C	-FC30	-20	-	-	-
Malleable Iron	A197	G5702-FCMB28	310-B18/6	-	-	-
	A47-32510	-FCMB35	-B22/14	-	-	-
	-35108	-FCMB37	-	-	-	-
Ductile Iron	A395	G5502-FCD40	-	-	-	-
	-	-FCD45	-	-	-	-
	A536	-FCD55	-	-	-	-
CarbonSteel	A216-WCA	G5151-SCPH1	-	A105	G3201-SF45	1503-161B
	-	G5101-SC46	1504-161	-	-	-
	A216-WCB	G5151-SCPH2	-B	A105	G3201-SF50	1503-161C
	-WCC	-	-	-	-	-
	-	G5101-SC55	-C	-	-	-
Carbon - 1/2Mo	A217-WC1	G5111-SCA41	1504-240	A182-F1	-	1503-240B
½Cr-½ Mo½ Ni	-WC4	-	-	-	-	-
1Cr-½ Mo-½ Ni	-WC5	-	-	-	-	1503-620
1¼Cr-½ Mo	-WC6	G5111-SCA51	1504-621	A182-12	-	-
2¼Cr-1 Mo	-WC9	-	-622	-F11	-	1503-622
3Cr-1 Mo	-	-	-	-F22	-	-
5Cr-½ Mo (C 0.15)	-	-	-	-F21	-	-
5Cr-½ Mo (C 0.25)	A217-C5	G5111-SCA52	1504-625	-F5	-	1503-625
7Cr-½ Mo	-	-	-	-F5a	-	-
9Cr-1 Mo	A217-C12	-	1504-629	-F7	-	-
Carbon Steel for Low Temp	A352-LCB	-	4242-GRA	-F9	-	-
Carbon - Si	-	-	-	A350-LF1	-	-
Carbon-1 Mo Steel for Low Temp	A352-LC1	-	-	-LF2	-	-
2½ Ni	-LC2	-	-	-	-	-
3½ Ni	-LC3	-	-	-	-	-
Cr - Ni - Cu - Al	-	-	-	A350-LF3	-	-
13Cr	A217CA15	G51212-SCS1	-	-LF4	G4303-SUS51B	1503-713
18Cr-8Ni (C 0.03)	A351-CF3	-	-	A128-F6	-SUS28B	-
18Cr-8Ni (C 0.08)	-CF8	G5121-SCS13	-	-F304L	-SUS27B	1503-801
18Cr-8Ni (C 0.10)	-	-	1504-801	-F304	-	-
18Cr-8Ni-2Mo (C 0.03)	A351-CF3M	G5121-SCS16	-	-F304H	G4303-SUS33B	-
18Cr-8Ni-2Mo (C 0.08)	-CF8M	-SCS14	1632-GRC	-F316L	-SUS32B	1503-845B
18Cr-8Ni-2Mo (C 0.10)	-	-	-	-F316	-	-
18Cr-8Ni-Ti (C 0.08)	-	-	-	-F316H	G303-SUS29B	-
18Cr-8Ni-Ti (C 0.10)	-	-	1504-821Ti	-F321	-F321H	1503-821Ti
18Cr-8Ni-Cb (C 0.08)	A351-CF8C	-	-	-	G4303-SUS43B	-821Nb
18Cr-8Ni-Cb (C 0.10)	-	-	1504-821Nb	-F347	-	-
18Cr-8Ni-Ti-Cb (C 0.08)	-	-	-	-F347H	-	-
18Cr-8Ni-Ti-Cb (C 0.10)	-	-	-	-F348	-	-
25Cr-2Ni (C 0.15)	-	-	-	-F348H	-	-
22Cr-12Ni (C 0.08)	A351-CH18	-	-	-F310	-	-
22Cr-12Ni (C 0.10)	-CH10	-	-	-	-	-
22Cr-12Ni (C 0.20)	-CH20	-	-	-	-	-
23Cr-19Ni (C 0.20)	-CK20	-	-	-	-	-
23Cr-19Ni (C 0.35)	-HK30	-	-	-	-	-
23Cr-19Ni (C 0.45)	-HK40	-	-	-	-	-
13Cr-19Ni-Mo (C 0.35)	-HT30	-	-	-	-	-
15Cr-13Ni-2Mo-Cb (C 0.10)	CF10MC	-	-	-	-	-
19Cr-27Ni-2Mo-3Cb (C 0.07)	-CN7M	-	-	-	-	-
8Cr-20Ni (C 0.20)	-	-	-	A182-F10	-	-
Hastelloy B	A494-N-12MV	-	-	-	-	-

TRIM MATERIAL (API STD. 600)

Trim No.	Seat Ring of Surface	Wedge / Disc or Surface	Stem
01	13% CR.	13% CR.	13% CR.
02	304 S.S.	304 S.S.	304 S.S.
03	F310 (CR. 25-NI 20)	F310 (CR. 25-NI 20)	F310 (CR. 25-NI 20)
04	HARD 13% CR.	HARD 13% CR.	13% CR.
05	STELLITE	STELLITE	13% CR.
05A	NI-CR.	NI-CR.	13% CR.
06	CU-NI	13% CR.	13% CR.
07	13% CR.	HARD 13% CR.	13% CR.
08	STELLITE	13% CR.	13% CR.
08A	NI-CR.	13% CR.	13% CR.
09	MONEL	MONEL	13% CR.
10	316 S.S.	316 S.S.	316 S.S.
11	MONEL	STELLITE	MONEL
12	STELLITE	316 S.S	316 S.S
13	ALLOY 20	ALLOY 20	ALLOY 20
14	STELLITE	ALLOY 20	ALLOY 20
15	MONEL	MONEL	MONEL
16	BRONZE	BRONZE	BRONZE
17	HASTELLOY B	HASTELLOY B	HASTELLOY B
18	HASTELLOY C	HASTELLOY C	HASTELLOY C

*Specification given are subject to changed without further notice.

MERCOID
Tel: 03-5569 2933 (6 Lines) Fax: 03-5569 2588, 5569 2788
Email: mercoid@mercoid.com.my, valmicro@valmicro.com.my
http://www.mercoid.com.my

PRESSURE - TEMPERATURE
BALL VALVE SEAT

SCREWED BALL VALVES
Pressure/Temperature Graph

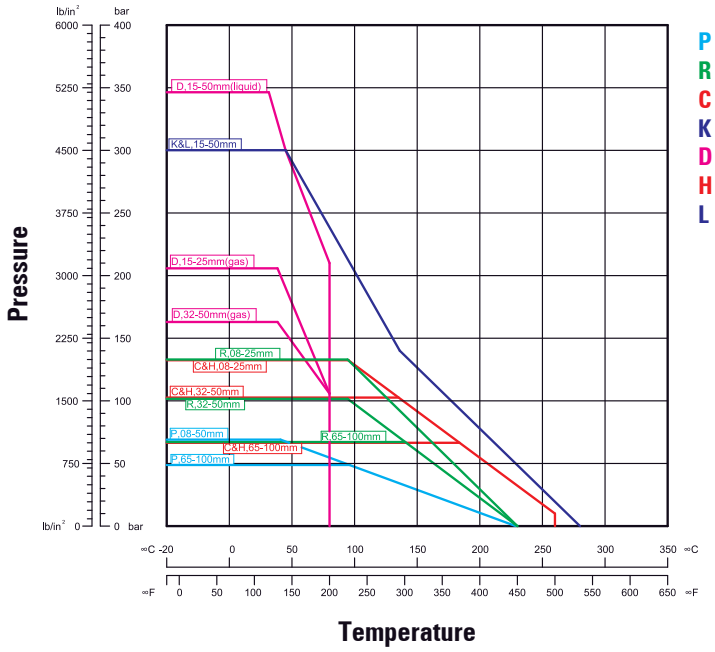

- **P** Virgin PTFE
- **R** 15% Glass filled PTFE
- **C** Carbon filled PTFE (25%)
- **K** Carbon filled PTFE (33%)
- **D** Delrin
- **H** Glass and metal oxide filled PTFE
- **L** Virgin PEEK

P VIRGIN PTFE
Inert to most chemicals, lowcoeficient of friation recommended for water foodsult and corrosive chemicals

R 15% GLASS FILLED PTFE
Withstands higher pressure than virgin PTFE. Good resistance to wear and deformation under load

C 25% CARBON FILLED PTFE
Specially for steam and thermal oil, low coefficient of friction inert to most media

H GLASS AND METAL OXIDE FILLED PTFE
Withstands higher temperature and pressure than filled PTFE. Good resistance under load. Not recommended for food stuff

K 33% CARBON FILLED PTFE
Suitable for elevated temperatures. Good resistance under high pressure loads, low coefficient of friction, suitable for many corrosive applications

L VIRGIN PEEK
Similar to filled PEEK but higher coefficient of friction, suitable for nuclear, tobacco FDA and clean applications

D DELRIN
Suitable for high pressures, good resistance to wear and deformation under load. Temperature limit 80ºC. Must not be used in presence of oxygen

*Specification given are subject to changed without further notice.

40 YEARS OF TOP QUALITY & INNOVATION

MERCOID GROUP

SINCE 1980

YOUR ONE SOLUTION

FOR ALL YOUR DEMANDING

VALVES | CONTROLS | INSTRUMENTATIONS

GROUP OF COMPANIES

Mercoid Control (M) Sdn Bhd
(Co. No. 80811-X) Since 1980

Mercoid Projects (M) Sdn Bhd
(Co. No. 233282-T) Since 1990

Valmicro Controls (M) Sdn Bhd
(Co. No. 775028-T) Since 2007

Varimex Process (M) Sdn Bhd
(Co. No. 981451-T) Since 2012

Varimex Valves (M) Sdn Bhd
(Co. No. 747806-A) Since 2006

Mercoid Energy (M) Sdn Bhd
(Co. No. 1211088-D) Since 2016

Valves Malaysia (M) Sdn Bhd
(Co. No. 1317771-P) Since 2019

No. 13 & 15, Jalan Pengacara U1/48,
Temasya Industrial Park,
Glenmarie, 40150 Shah Alam,
Selangor Darul Ehsan, Malaysia.

Tel
+(6)03-5569 2933 (5 Hunting Lines)

Fax
+(6)03-5569 2588 | +(6)03-5569 2788

Email
mercoid@mercoid.com.my
valmicro@valmicro.com.my

http://www.mercoid.com.my